QUADROS E VITRINAS

CORK BOARD

8mm cork thickness

6 sizes available

INFORMATION

This board is made of 8mm cork thickness and aluminum frames with plastic corners. With 6 sizes available, the cork whiteboard represents a versatile solution tool that you can use in various settings to supplement an informative presentation. Ideal for being used at classrooms or conference offices.

CORK BOARD	SIZES
✻14.008	600x450mm
✻14.009	900x600mm
✻14.010	1200x900mm
✻14.011	1500x900mm
✻14.012	1500x1200mm
✻14.013	1800x1200mm

14.034

pins available
(not included)

DAX FRAME BOARD

4 sizes available

* supplied with hangers

INFORMATION

* W: Width H: Height

This cork board is made of aluminum frames with metallic hangers. With 4 sizes available, this corkboard has a solid aluminum frame. It features a self healing, durable surface that will stand up for years of use. Due to having a finely ground cork surface, the corkboard will hold, tacks, push pins and staples firmly in place. We provide the corkboard with hangers and screws, so that mounting is simple as well as quick. Ideal for being used at hospitals, schools, government agencies, conference offices or for common rooms.

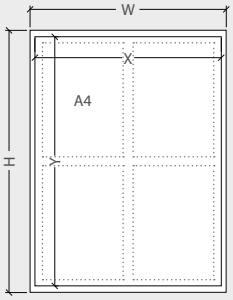

REF
10.320

DAX

Ref.	External (WxH)	Visual (X-Y)	A4 QTY
10.320	502x672mm	487x657mm	4 x A4
10.321	502x992mm	487x977mm	6 x A4
10.325	732x992mm	717x977mm	9 x A4
10.328	962x992mm	947x977mm	12 x A4

EN	Whiteboard made of anodized aluminum, thickness 18 mm, plastic corners and galvanized rear. Includes pen holder tray.
FR	Tableau encadré en aluminium anodisé, épaisseur 18mm, angle en plastique et dos galvanisé. Plateau pour marqueurs inclus.
PT	Quadro em alumínio anodizado, espessura 18mm, cantos de plástico e traseira galvanizada. Inclui um suporte para marcadores.
ES	Pizarra en aluminio anodizado, grosor 18mm, cantoneras de plástico y trasera galvanizada. Incluye bandeja porta rotuladores.

5 sizes available

INFORMATION

This whiteboard is equipped with a magnetic surface and it includes an attachable tray. With 5 sizes available and made of anodized aluminum frames with hangers and plastic corners. These whiteboards are versatile presentation tools that you can use in various settings to supplement an informative presentation. Ideal for classrooms or conference offices.

ENAMELLED	SIZES
✻14.000	900x600mm
✻14.001	1200x900mm
✻14.002	1500x1200mm
✻14.003	1800x1200mm
✻14.004	2000x1200mm

ENAMELLED WHITEBOARD

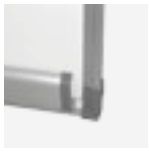

erasable marker (not included)

magnets available (not included)

14.031
14.032
14.033

RENNES FRAME BOARD

easy to clean

INFO

* W: Width H: Height

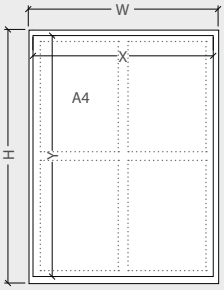

RENNES

Ref.	External (WxH)	Visual (X-Y)	A4 QTY
10.329	502x672mm	487x657mm	4 x A4
14.094	502x992mm	487x977mm	6 x A4
14.095	732x992mm	717x977mm	9 x A4
10.332	962x992mm	947x977mm	12 x A4

SALLES FRAME BOARD

for pins & magnets

INFO

* W: Width H: Height

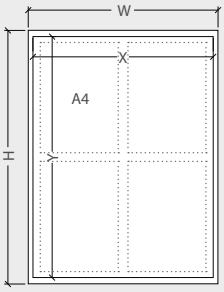

SALLES

Ref.	External (WxH)	Visual (X-Y)	A4 QTY
10.333	502x672mm	487x657mm	4 x A4
10.334	502x992mm	487x977mm	6 x A4
14.096	732x992mm	717x977mm	9 x A4
14.097	962x992mm	947x977mm	12 x A4

ONE-SIDED A-BOARD 88x50cm

folding rear leg for easy storage

ideal for displaying at shops, bars, restaurants etc...

INFORMATION

* mm

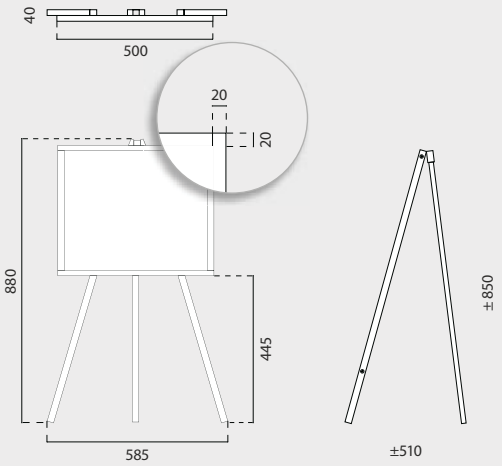

This wooden one-sided A-Board is made of light wood, its neutral color allows the chalkboard to blend in virtually to any indoor locations. Featuring a folding rear leg for an easy storage and transportation. These Blackboards are ideal for being used at retail shops, bars, restaurants or for schools. To write on this wooden a-frame black board, users are recommended to use regular stick chalks (not included).

with adjustable angle back leg

ONE-SIDED (88x50cm)

	QTY	N.W	G.W	C.B.M	SIZE
Packing	1	4.5kg	5.5kg	0.0324	600x60x900mm
14.113	Fold: 585x40x880mm			Frame: 20mm	

INTERCHANGEABLE PLATES
A-BOARD 118x65cm

interchangeable advertising
2.5mm inserts on both sides

INFORMATION * mm

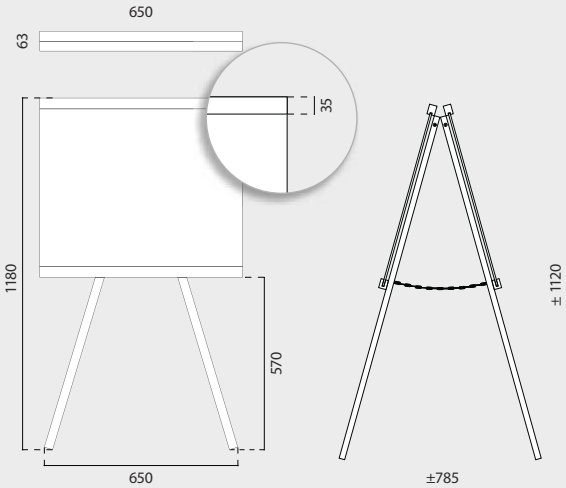

This Wooden A-Board is made of light wood and it has interchangeable plates for a more comfortable modification and graphic change. You can insert 2.5mm advertising on both sides. The double-sided signs help to draw more potential customer coming from both directions into your business. Possibility of pulling out boards. Ideal for displaying at retail shops, bars, restaurants or for schools. To write on this wooden a-frame black board, users are recommended to use regular stick chalks (not included).

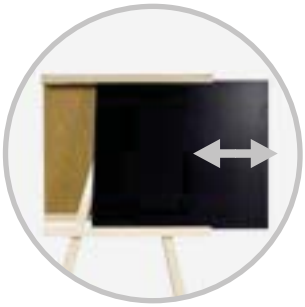

possibility of
pulling out boards

INTERCHANGEABLE PLATES (118x65cm)

	QTY	N.W	G.W	C.B.M	SIZE
Packing	1	4kg	4.5kg	0.064	670x80x1200mm
✻ 14.114	Fold: 650x63x1180mm				Frame: 35mm

ONE-SIDED A-BOARD 118x61-4cm

INFORMATION * mm

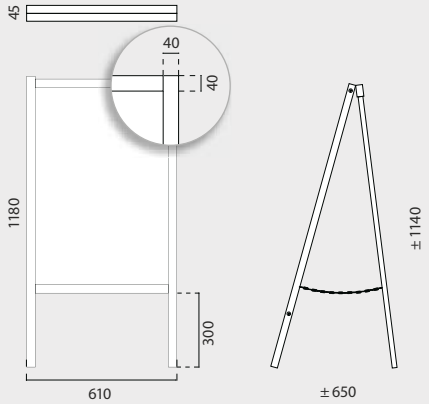

This wooden single sided A-Board is made of wood with High Density Fiberboard blackboard, its natural wooden color allows the chalkboard to blend in virtually to any indoor locations. Featuring a folding rear leg for an easy storage and transportation. These Blackboards are ideal for being used at retail shops, bars, restaurants or for schools. To write on this wooden a-frame black board, users are recommended to use regular stick chalks (not included).

ONE-SIDED (118x61-4cm)

	QTY	N.W	G.W	C.B.M	SIZE
Packing	1	6kg	6.5kg	0.04	620x55x1200mm

14.112	Fold: 610x45x1180mm	Frame: 40mm

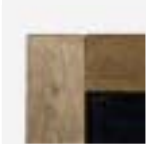

made of wood with
High Density Fiberboard

DOUBLE-SIDED A-BOARD 90x51-3.5cm

INFORMATION * mm

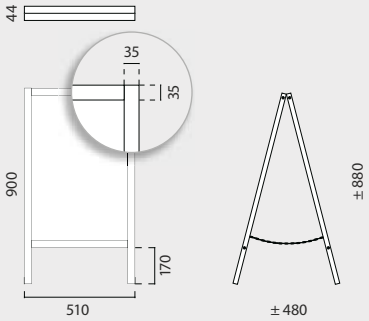

This stained and lacquered wooden double-sided A-Board is made of wood with High Density Fiberboard. The double-sided signs help to draw more potential customer coming from both directions into your business. Ideal for displaying at retail shops, bars, restaurants or for schools. Perfect to advertise multiple promotions at once. To write on this wooden a-frame black board, users are recommended to use regular stick chalks (not included).

DOUBLE-SIDED (90x51-3.5cm)

	QTY	N.W	G.W	C.B.M	SIZE
Packing	1	3.1kg	4kg	0.03	520x55x920mm

14.103	Fold: 510x44x900mm	Frame: 35mm

quality chalkboards feature
a strong wooden frame

made of wood
and HDF board.
Stained and
lacquered

DOUBLE-SIDED A-BOARD 100x60-3.5cm

INFORMATION * mm

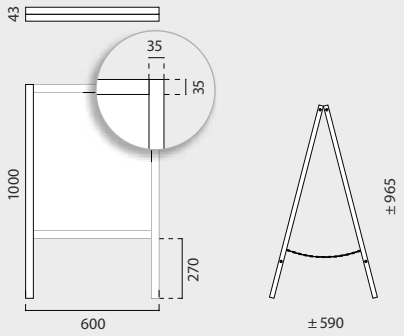

This stained and lacquered wooden double-sided "A" Shaped Board is made of wood with High Density Fiberboard. The double-sided signs help to draw more potential customer coming from both directions into your business. Ideal for displaying at retail shops, bars, restaurants or for schools. Perfect to advertise multiple promotions at once. To write on this wooden a-frame black board, users are recommended to use regular stick chalks (not included).

DOUBLE-SIDED (100x60-3.5cm)

	QTY	N.W	G.W	C.B.M	SIZE
Packing	1	4.5kg	5.5kg	0.034	610x55x1020mm

✻ 14.104	Fold: 600x43x1000mm	Frame: 35mm

the A frame blackboards fold flat for storage

with rear foot and chain stopper

DOUBLE-SIDED A-BOARD 118x61-4cm

INFORMATION * mm

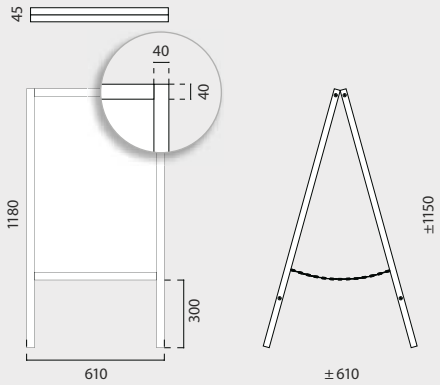

This stained and lacquered wooden double-sided A-Board is made of wood with High Density Fiberboard. The double-sided signs help to draw more potential customer coming from both directions into your business. Ideal for displaying at retail shops, bars, restaurants or for schools. Perfect to advertise multiple promotions at once. To write on this wooden a-frame black board, users are recommended to use regular stick chalks (not included).

DOUBLE-SIDED (118x61-4cm)

	QTY	N.W	G.W	C.B.M	SIZE
Packing	1	6kg	7kg	0.04	615x55x1200mm

✻ 14.105	Fold: 610x45x1180mm	Frame: 40mm

A-Blackboards have a chain stopper

DOUBLE-SIDED A-BOARD XL 160x72-4cm

INFORMATION * mm

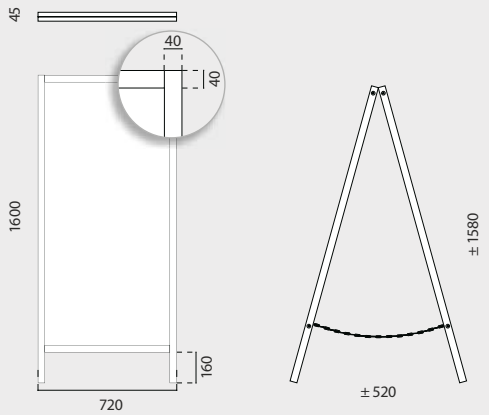

This wooden double-sided A-Board is made of wood with High Density Fiberboard blackboard, its natural wooden color allows the chalkboard to blend in virtually to any indoor locations. Featuring the larger blackboard available in this catalogue. Foldable for easy storage and mobility. These Blackboards are ideal for being used at retail shops, bars, restaurants or for schools. To write on this wooden a-frame black board, users are recommended to use regular stick chalks (not included).

DOUBLE-SIDED XL

	QTY	N.W	G.W	C.B.M	SIZE
Packing	1	8kg	10kg	0.064	725x50x1625mm

✻14.107	Fold: 720x45x1600mm	Frame: 40mm

larger blackboard available

DOUBLE-SIDED A-BOARD LOGO B 160x72-4cm

INFORMATION * mm

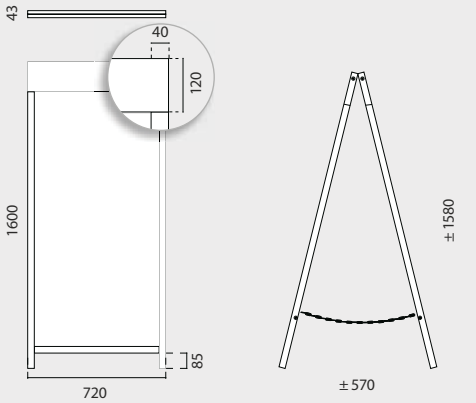

This stained and lacquered wooden 2-sided A-Board has an extended top for advertising space and it is made of wood with High Density Fiberboard. The double-sided signs help to draw more potential customer coming from both directions into your business. Ideal for displaying at retail shops, bars, restaurants or for schools. Foldable for easy storage and mobility. To write on this wooden a-frame black board, users are recommended to use regular stick chalks (not included).

DOUBLE-SIDED LOGO B

	QTY	N.W	G.W	C.B.M	SIZE
Packing	1	6kg	7kg	0.071	740x60x1620mm

✻14.120	Fold: 720x43x1600mm	Top: 720x120mm

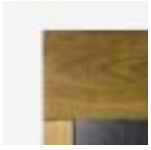

1360mm blackboard height

DOUBLE-SIDED A-BOARD 118x65-6cm

INFORMATION * mm

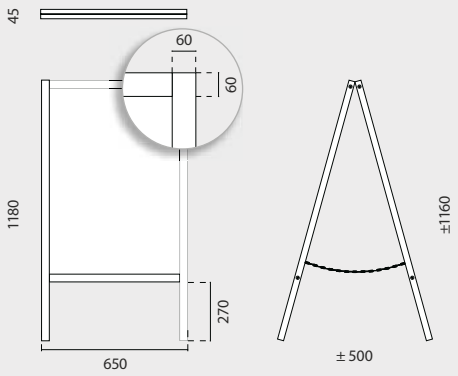

This stained and lacquered wooden double-sided "A" Shaped Board is made of wood with High Density Fiberboard. The double-sided signs help to draw more potential customer coming from both directions into your business. Ideal for displaying at retail shops, bars, restaurants or for schools. Foldable for easy storage and mobility. To write on this wooden a-frame black board, users are recommended to use regular stick chalks (not included).

DOUBLE-SIDED (118x65-6cm)

	QTY	N.W	G.W	C.B.M	SIZE
Packing	1	6kg	7kg	0.039	660x55x1200mm

✻ 14.110	Fold: 650x45x1180mm	Frame: 60mm

6cm wooden frame thickness

two sides for displaying adverts

DOUBLE-SIDED SPECIAL TOP A-BOARD 118x65-6cm

INFORMATION * mm

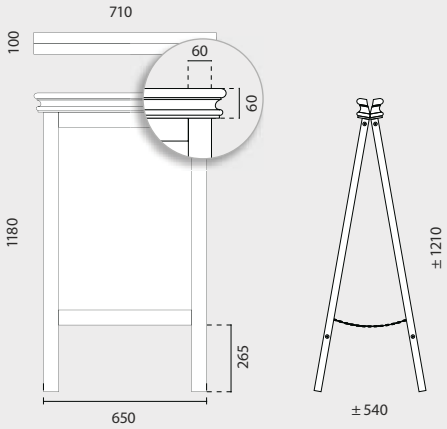

This stained and lacquered wooden double-sided A-Board is made of wood with High Density Fiberboard. The double-sided signs help to draw more potential customer coming from both directions into your business. Ideal for displaying in places where a distinctive touch is sought, such as restaurants or academies. Foldable for easy storage and mobility. To write on this wooden a-frame black board, users are recommended to use regular stick chalks (not included).

DOUBLE-SIDED SPECIAL TOP

	QTY	N.W	G.W	C.B.M	SIZE
Packing	1	6kg	7kg	0.1	670x120x1250mm

✻ 14.111	Fold: 710x100x1180mm	Frame: 60mm

stylish blackboard

with HDB board, stained and lacquered

DOUBLE-SIDED
WITH SPACE FOR ADVERT
A-BOARD 118+23x61-4cm

INFORMATION * mm

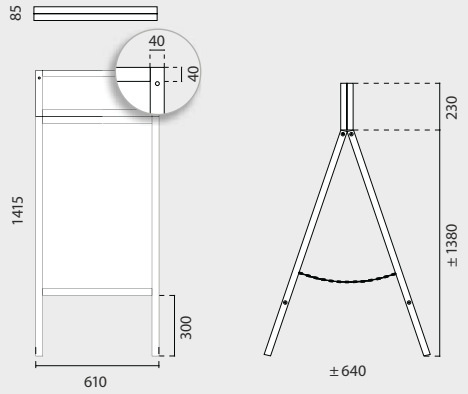

This double-sided A-Board is made of wood with High Density Fiberboard blackboard, its natural wooden color allows the chalkboard to blend in virtually to any indoor locations. Featuring a space header for advert. Foldable for easy storage and mobility. These Blackboards are ideal for being used at retail shops, bars, restaurants or for schools. To write on this wooden a-frame black board, users are recommended to use regular stick chalks (not included).

DOUBLE-SIDED WITH ADVERT SPACE

	QTY	N.W	G.W	C.B.M	SIZE
Packing	1	7kg	8.5kg	0.12	630x160x1200mm

✻ 14.118	Fold: 610x85x1180mm	Frame: 40mm

DOUBLE-SIDED
INTERCHANGEABLE PLATES
A-BOARD 119x59cm

INFORMATION * mm

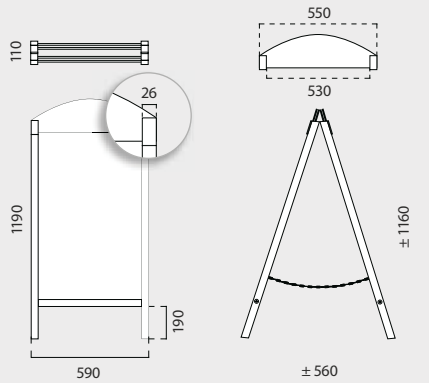

This stained and lacquered wooden 2-sided A-Board has interchangeable plates for adverts and it is made of wood with High Density Fiberboard. The double-sided signs help to draw more potential customer coming from both directions into your business. Ideal for displaying at retail shops, bars, restaurants or for schools. Foldable for easy storage and mobility. To write on this wooden a-frame black board, users are recommended to use regular stick chalks (not included).

interchangeable 3mm thickness advertising inserts on both sides

DOUBLE-SIDED INTERCHANGEABLE PLATES

	QTY	N.W	G.W	C.B.M	SIZE
Packing	1	6kg	7kg	0.0991	610x130x1250mm

✻ 14.119	Fold: 590x110x1190mm	Top: 165x530mm

DOUBLE-SIDED A-BOARD WATERPROOF 118x61-4cm

INFORMATION * mm

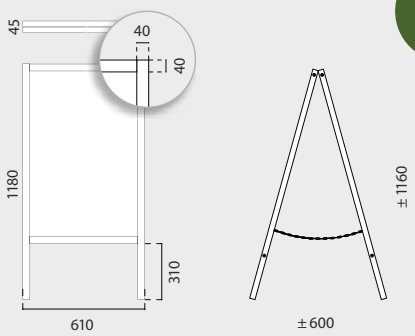

This waterproof double-sided "A" Shaped Board is stained and lacquered and features an ABS blackboard, so it is protected against harmful weather conditions. The double-sided signs help to draw more potential customer coming from both directions into your business. Ideal for displaying at retail shops, bars, restaurants or for schools. Foldable for an easy storage and mobility. To write on this wooden a-frame black board, users are recommended to use regular stick chalks (not included).

DOUBLE-SIDED WATERPROOF

	QTY	N.W	G.W	C.B.M	SIZE
Packing	1	6kg	7kg	0.037	620x50x1200mm

✻ 14.106	Fold: 610x45x1180mm	Frame: 40mm

protected against harmful weather conditions

stained and lacquered with ABS blackboard

DOUBLE-SIDED MADE OF WOODEN LOGS BOARD 129x80cm

INFORMATION * mm

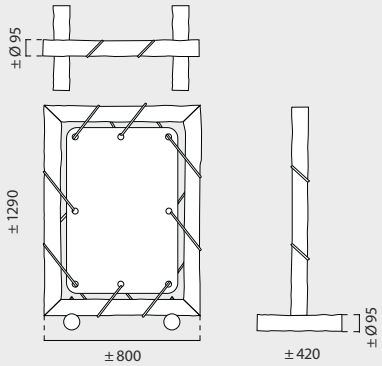

This stained and lacquered wooden double-sided A-Board is made of natural wooden logs. The double-sided signs help to draw more potential customer coming from both directions into your business. Ideal for displaying at retail shops, bars, restaurants or for schools. Foldable for an easy storage and mobility. To write on this wooden a-frame black board, users are recommended to use regular stick chalks (not included).

DOUBLE-SIDED WOODEN LOGS

	QTY	N.W	G.W	C.B.M	SIZE
Packing	1	13kg	14.5kg	0.1428	850x120x1400mm

✻ 14.116	Fold: 800x95x1290mm	± Ø95mm

made of natural wooden logs

original and sturdy design

HANGING BOARD
REGULAR FRAME 3.5cm

35mm frame width

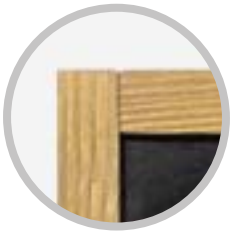

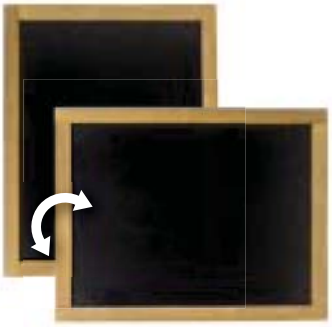

landscape
or portrait

made of wood with HDF board
stained frame

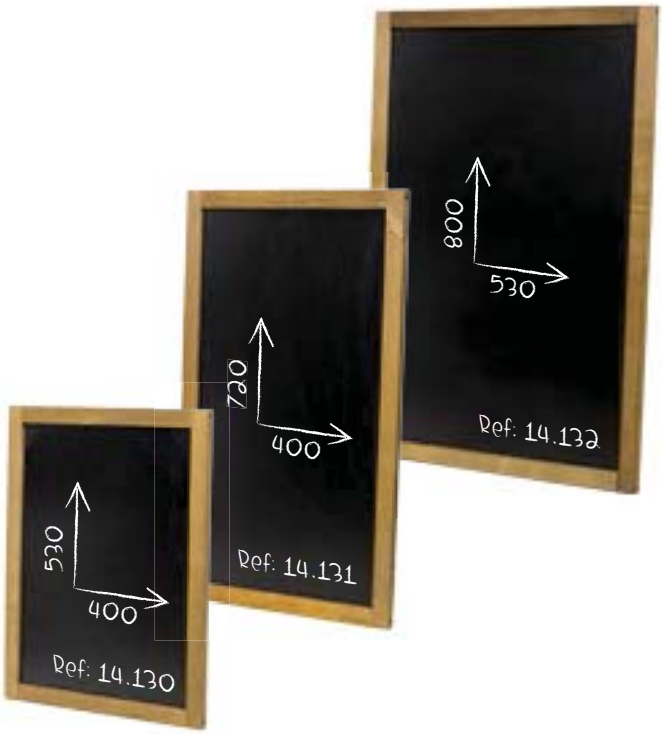

INFORMATION * mm

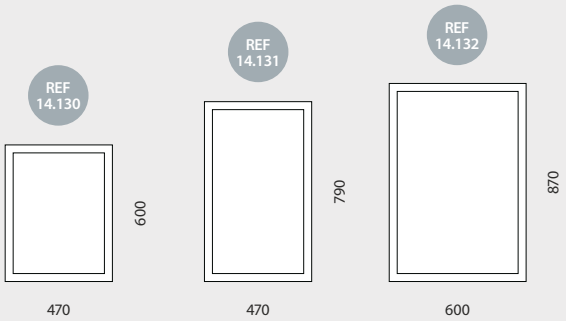

This hanging frame is made of stained wood with HDF board. All of them have an appropiate hanger system included. With 3 sizes available. Perfect for displaying last company's offers. Ideal for being used at retail shops, bars, restaurants, etc...

all hanging boards have an
appropriate hanger system

REGULAR FRAME

HANG B. 60	QTY	N.W	G.W	C.B.M	SIZE
Packing	1	1.2kg	2kg	0.009	490x30x620mm
✻ 14.130	Outer Size: 470x20x600mm				Frame: 35mm
HANG B. 79	QTY	N.W	G.W	C.B.M	SIZE
Packing	1	1.5kg	2.5kg	0.011	490x30x810mm
✻ 14.131	Outer Size: 470x20x790mm				Frame: 35mm
HANG B. 87	QTY	N.W	G.W	C.B.M	SIZE
Packing	1	2kg	3kg	0.016	620x30x890mm
✻ 14.132	Outer Size: 600x20x870mm				Frame: 35mm

HANGING BOARD WAVES TOP 3.5cm

INFORMATION * mm

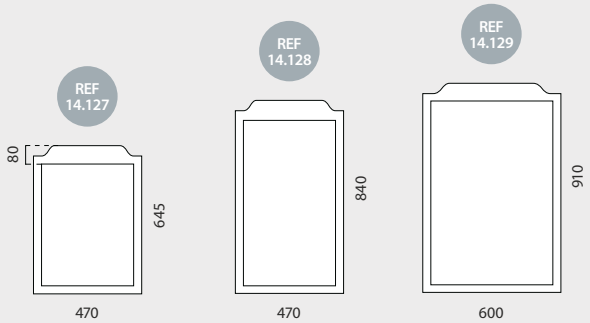

This hanging frame features an extended top space. All of them have an appropiate hanger system. Three sizes available. Perfect for displaying last company's offers. Ideal for being used at retail shops, bars, restaurants, etc..

WAVES TOP

H.B.64.5	QTY	N.W	G.W	C.B.M	SIZE
Packing	1	1.2kg	2kg	0.009	490x30x660mm
✻ 14.127	Outer Size: 470x20x645mm				
H.B.84	QTY	N.W	G.W	C.B.M	SIZE
Packing	1	1.5kg	2.5kg	0.012	490x30x860mm
✻ 14.128	Outer Size: 470x20x840mm				
H.B.91	QTY	N.W	G.W	C.B.M	SIZE
Packing	1	2kg	3kg	0.017	620x30x930mm
✻ 14.129	Outer Size: 600x20x910mm				

with extended top space

35mm frame width

HANGING BOARD LACQUERED FRAME 4.3cm

INFORMATION * mm

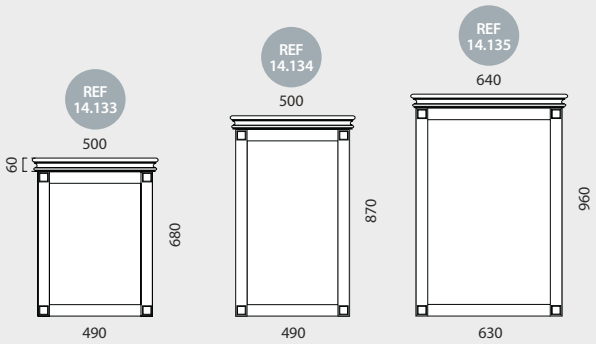

This hanging frame is made of lacquered wood and features a stylish decorative top. All the hanging boards have an appropiate hanger system included. 3 sizes available. Ideal for being used at retail shops, bars, restaurants, etc..

LACQUERED FRAME

H.B. 68	QTY	N.W	G.W	C.B.M	SIZE
Packing	1	1.5kg	2.5kg	0.025	520x70x710mm
✻ 14.133	Outer Size: 500x47x680mm				
H.B. 87	QTY	N.W	G.W	C.B.M	SIZE
Packing	1	2kg	3kg	0.032	520x70x900mm
✻ 14.134	Outer Size: 500x47x870mm				
H.B. 96	QTY	N.W	G.W	C.B.M	SIZE
Packing	1	2.5kg	3.5kg	0.044	650x70x980mm
✻ 14.135	Outer Size: 640x47x960mm				

lacquered board

43mm frame width

COUNTER DIAGONAL BOARD 24x15cm

INFORMATION * mm

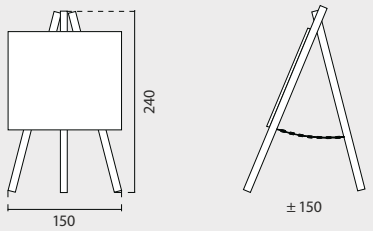

This tabletop backboard is made of stained wood. It includes an adjustable angle back leg and a chain stopper. Perfect for displaying at academies entrances, information desks, waiting rooms or at the office...

BOARD 24x15cm

	QTY	N.W	G.W	C.B.M	SIZE
Packing	1	0.4kg	1kg	0.017	170x40x260mm

14.149	Fold: 150x20x240mm	Header: 150x130mm

made of stained wood

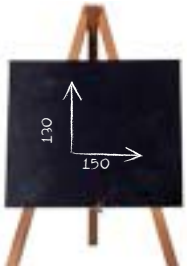

*pencils (not included)

with adjustable angle back leg and chain stopper

COUNTER DIAGONAL BOARD A5 | A4

INFORMATION * mm

These slate displays are made of stained wood and HDF board, and come in A4 or A5 sizes, so you can choose the appropiate for your showing or exhibition.

BOARD A5 | A4

COUNTER A5	QTY	N.W	G.W	C.B.M	SIZE
Packing	1	0.4kg	1kg	0.0039	175x90x250mm

14.147	155x63x230mm	Base: 155x63x20mm

COUNTER A4	QTY	N.W	G.W	C.B.M	SIZE
Packing	1	0.5kg	1kg	0.007	230x90x340mm

14.148	210x63x312mm	Base: 210x63x20mm

tabletop slate made of stained wood and double HDF board

TABLETOP BOARDS DOUBLE SIDED A5 | A4

INFORMATION * mm

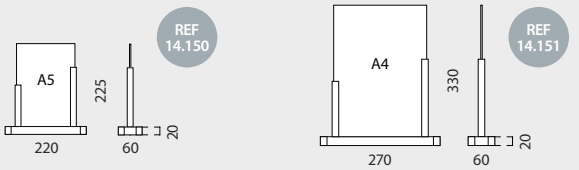

These Table Boards are made of stained wood and HDF board. Ideal to announce upcoming events, shows, meetings or drinks offers at bars or restaurants.

DOUBLE SIDED A5 | A4

TABLETOP A5	QTY	N.W	G.W	C.B.M	SIZE
Packing	1	0.32kg	1kg	0.0044	230x80x240mm

14.150	Fold: 220x60x225mm	Base: 220x60x20mm

TABLETOP A4	QTY	N.W	G.W	C.B.M	SIZE
Packing	1	0.6kg	1kg	0.0081	350x80x290mm

14.151	Fold: 270x60x330mm	Base: 270x60x20mm

ideal to announce menu or events

TABLETOP A-BOARDS DOUBLE SIDED A5 | A4

INFORMATION * mm

These double sided HDF A-boards come in A4 or A5 sizes, so you can choose the appropiate for your showing. Tabletop Boards are ideal to announce upcoming events, shows, meetings or drinks offers at your bar, club or restaurant.

A-BOARD A5 | A4

TABLETOP A5	QTY	N.W	G.W	C.B.M	SIZE
Packing	1	0.25kg	1kg	0.0052	175x120x250mm
✻ 14.152	Fold: 155x100x225mm				Base: 155x100x20mm
TABLETOP A4	QTY	N.W	G.W	C.B.M	SIZE
Packing	1	0.4kg	1kg	0.0089	220x120x340mm
✻ 14.153	Fold: 200x100x320mm				Base: 200x100x20mm

tabletop HDF A-board

TABLETOP FRAME-BOARDS DOUBLE SIDED A5 | A4

INFORMATION * mm

These double sided HDF A-boards features a stylish framed design. The Tabletop Framed-Boards are ideal to announce upcoming events, shows, meetings or drinks offers at your bar, club or restaurant.

FRAME-BOARD A5 | A4

TABLETOP A5	QTY	N.W	G.W	C.B.M	SIZE
Packing	1	0.3kg	1kg	0.003	160x80x240mm
✻ 14.154	Fold: 140x60x220mm				Base: 140x60x20mm
TABLETOP A4	QTY	N.W	G.W	C.B.M	SIZE
Packing	1	0.5kg	1kg	0.0058	220x80x330mm
✻ 14.155	Fold: 200x60x310mm				Base: 200x60x20mm

special framed HDF blackboards

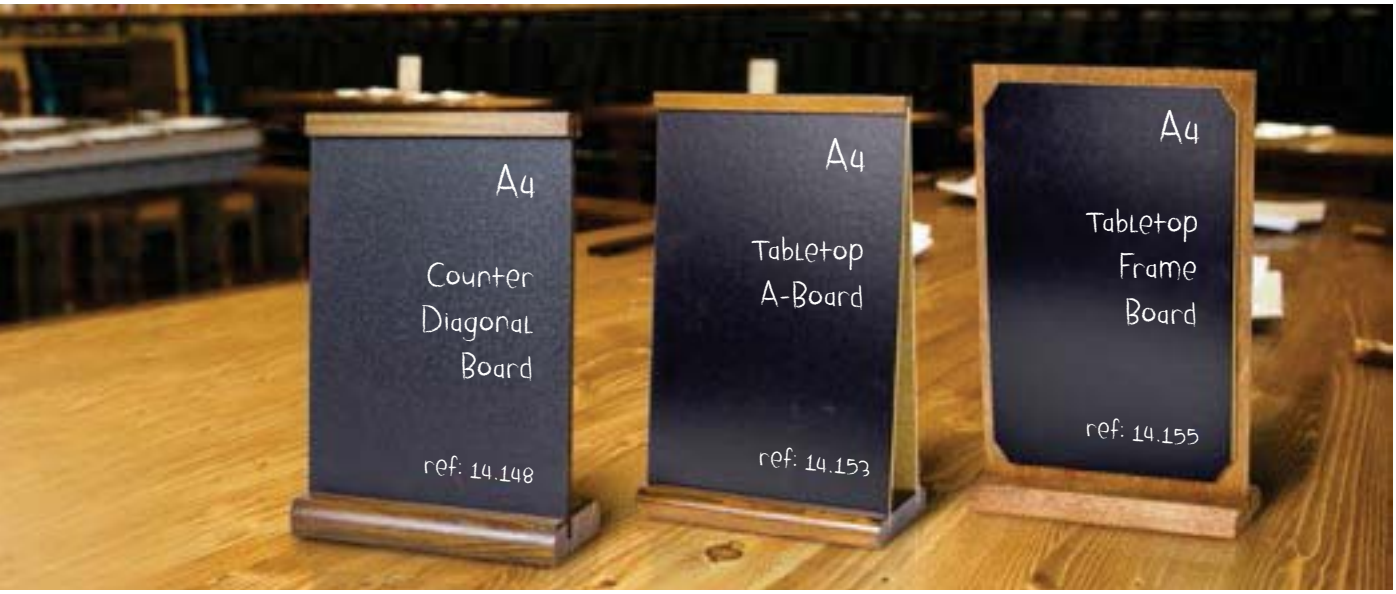

WOODEN EASEL 178x60-133cm

INFORMATION * mm

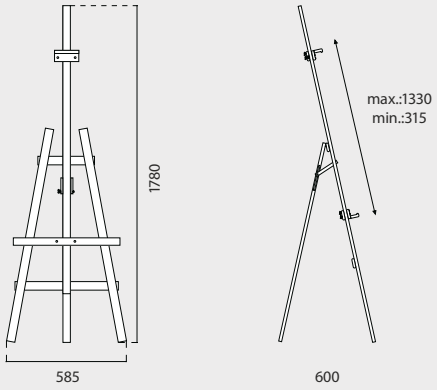

A-Wooden Easels, rely on their triangular silhouette to provide a solid base for your painting, but also is a great addition to any room for displaying. With canvas height adjustment, you can accomodate canvas up to 1330mm in height. The rear leg allows for placement in corners and tight spaces and can be flattened for easy storage. Ideal to elegantly display poster frames or theater announcements, also many business and home owners use this studio rack to showcase fine art, posters and photography.

178x60-133cm

	QTY	N.W	G.W	C.B.M	SIZE
Packing	1	3kg	4kg	0.504	600x420x2000mm

14.139	Folded: 585x110x1780mm	Strip: 40mm

with canvas height adjustment

it accommodates canvas up to 1330mm in height

with adjustable angle back leg

WOODEN EASEL 156x60-122cm

INFORMATION * mm

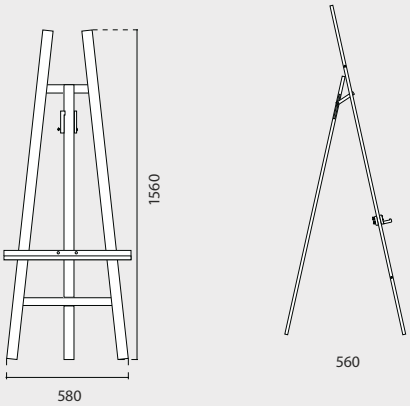

A-Wooden Easels, rely on their triangular silhouette to provide a solid base for your painting, but also is a great addition to any room for displaying. With canvas height adjustment, you can accomodate canvas up to 1330mm in height. The rear leg allows for placement in corners and tight spaces and can be flattened for easy storage. Ideal to elegantly display poster frames or theater announcements, also many business and home owners use this studio rack to showcase fine art, posters and photography.

156x60-122cm

	QTY	N.W	G.W	C.B.M	SIZE
Packing	1	3kg	4kg	0.428	600x420x1700mm

14.140	Folded: 580x110x1560mm	Strip: 40mm

with adjustable angle back leg

folding rear leg for easy storage

TABLETOP WOODEN EASEL 42x19-34cm

INFORMATION * mm

The mini wood Easels, rely on their triangular silhouette to provide a solid base for your painting and they fold flat for easy storage. They are ideal for displaying art, photography at meetings, galleries, etc... Perfect to display with a touch of distinction and in small spaces.

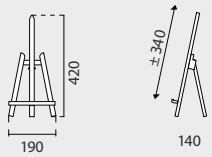

42x19-34cm

	QTY	N.W	G.W	C.B.M	SIZE
Packing	1	0.5kg	1kg	0.0073	210x80x440mm

14.141	Folded Size: 190x60x420mm	Strip: 20mm

mini wood easels are ideal for displaying at meetings, galleries, etc...

it folds flat for easy storage

*paint brushes (not included)

TABLETOP WOODEN EASEL 52x28-45cm

INFORMATION * mm

The mini wood Easels, rely on their triangular silhouette to provide a solid base for your painting and they fold flat for easy storage. It features an adjustable angle back leg. They are ideal for displaying art, photography at meetings, galleries, etc... Perfect to display with a touch of distinction and in small spaces.

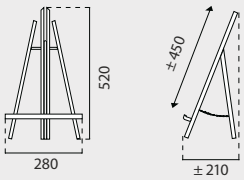

52x28-45cm

	QTY	N.W	G.W	C.B.M	SIZE
Packing	1	0.5kg	1kg	0.011	300x70x540mm

14.142	Folded Size: 280x50x520mm	Strip: 20mm

with adjustable angle back leg

*pencil can (not included)

TABLETOP WOODEN EASEL 62x28-54cm

with adjustable angle and height to accommodate displaying

INFORMATION * mm

The mini wood Easels provide a solid base for your painting and they fold flat for easy storage. It features a canvas height adjustment, so you can accomodate canvas up to 540mm in height. They are ideal for displaying art, photography at meetings, galleries, etc... Perfect to display with a touch of distinction and in small spaces.

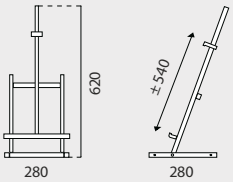

62x28-54cm

	QTY	N.W	G.W	C.B.M	SIZE
Packing	1	0.5kg	1kg	0.019	300x100x640mm

14.143	Folded Size: 280x90x700mm	Strip: 20mm

*paint brushes (not included)

FLIPCHART

magnetic board

INFORMATION * mm

The structure of this Flipchart is made of steel and its magnetic white board measures 680x940mm and provides a multifunctional writing surface. The telescopic rear leg allows its placement in corners and tight spaces and let adjust height up to 1850mm. Conveniently store dry erase markers and cleaning materials on the pen tray included. Either utilize the height adjustable magnetic stand with dry erase markers or attach a presentation ream to the magnetic board. This whiteboard flipchart is ideal for meetings in the office or describing a project to a packed classroom.

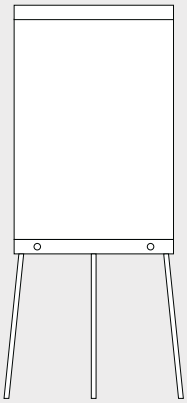

FLIPCHART	SIZE
✻ 14.019	700x1030mm

REVOLVING WHITEBOARD

magnetic board with wheels

INFORMATION * mm

This mobile whiteboard is ideal for meetings in the office or describing a project to a packed classroom. It has a chrome finished aluminum frame and a magnetized surface, allowing you to hang important handouts or notes on either side of the markerboard. This double sided whiteboard has reversible magnetic surfaces that swivel from back to front with ease as well as lock in place while in use. You also, can secure the board upright. It is built on 4 wheels for easy transport and it has a metallic pen tray to keep all writing tools by hand. 3 sizes available.

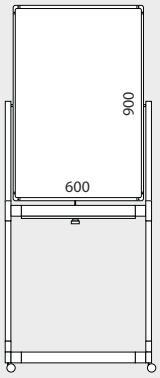

REF 14.020

REVOLVING	SIZES
✻ 14.020	600x900mm
✻ 14.021	1500x1200mm
✻ 14.022	1800x1200mm

EN	Swing door showcases with cork background or magnetic white metal sheet. Made of silver anodized aluminium. They include acrylic lockable door. Ideal for pinning up notes or magnets.
FR	Vitrine pour annonces avec fond en liège ou magnétique. Cadre en aluminium et porte en acrylique avec serrure. Idéal pour la fixation de documents à l'aide de punaises ou aimants.
PT	Vitrina com fundo de cortiça ou magnético. Fabricada em alumínio anodizado. Possui fechadura. Material: Alumínio e acrílico.
ES	Vitrinas para anuncios con fondo de corcho o metálico. Marco de aluminio con puerta de metacrilato y cerradura. Ideal para la fijación de documentos mediante chinchetas o imanes.

WATERLOO
BULLETIN BOARD BOX

NEW

INFORMATION

* mm

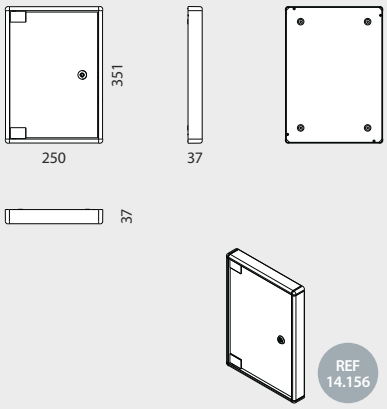

Waterloo Bulletin Board Box is made of anodized aluminium and it is a common system for information posting which enhances community announcements, offices notices or school messages. It is designed to draw attention to important, single sheet postings that can be changed at any time. This tackboard has a single lockable door. The lock provides controlled access to the posting surface. 2 sizes available, featuring A4 format or with a surface for 2 units of A4 document. It has magnet accessories ref 14.032 included. This tackboard provides the perfect display area for signs, announcements, messages, graphics, photos or memorabilia and they are ideal at community common areas, schools, universities and supermarkets.

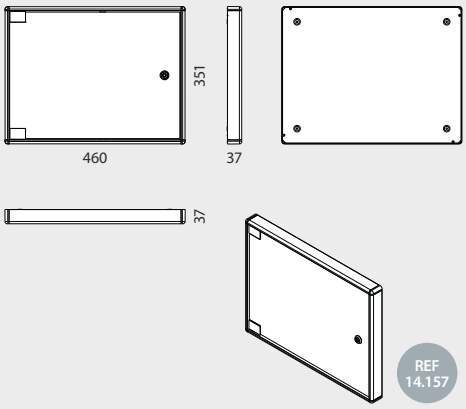

WATERLOO A4

	QTY	N.W	G.W	C.B.M	SIZE
Packing	1	1.453kg	1.65kg	0.0052	400x280x46 mm
14.156	1xA4			External Size: 250x351x37mm	

WATERLOO 2xA4

	QTY	N.W	G.W	C.B.M	SIZE
Packing	1	2.427kg	2.679kg	0.0088	506x380x46 mm
14.157	2xA4			External Size: 460x351x37mm	

MADE IN EUROPE

BAYERN

INFORMATION

This showcase with aluminium frame and lockable door includes a background made of cork, where you can pin your notes. Featuring rounded corners, a front locker and 4 sizes available. These enclosed bulletin boards provide a perfect display space for postings such as announcements or creative advertisements. These bulletin boards exhibit your important information in hallways, classrooms, vestibules, reception rooms or more! The single lockable door ensures that documents, graphics or pictures stay clean and undisturbed.

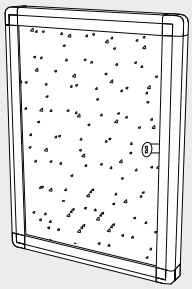

BAYERN	SIZES
14.090	250x400mm
14.043	350x500mm
14.044	500x700mm
14.091	600x600mm

14.034

*pins available (not included)

MADE IN EUROPE

ROSTOCK

INFORMATION

* mm

This showcase with aluminium frame and lockable door includes a background made of cork, where you can pin your notes. Featuring a side locker and 3 sizes available. These enclosed bulletin boards provide a perfect display space for postings such as announcements or creative advertisements. These bulletin boards exhibit your important information in hallways, classrooms, vestibules, reception rooms or more! The single lockable door ensures that documents, graphics or pictures stay clean and undisturbed.

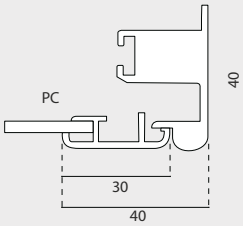

ROSTOCK	SIZES
✻14.084	500x700mm
✻14.085	600x800mm
✻14.086	700x1000mm

14.034

*pins available (not included)

MADE IN EUROPE

HESSEN

INFORMATION

This showcase with aluminium frame and lockable door includes a metallic background, where you can put your notes with magnets accesories (not included). Featuring rounded corners, a front locker and 4 sizes available. These enclosed bulletin boards provide a perfect display space for postings such as announcements or creative advertisements. These bulletin boards exhibit your important information in hallways, classrooms, vestibules, reception rooms or more! The single lockable door ensures that documents, graphics or pictures stay clean and undisturbed.

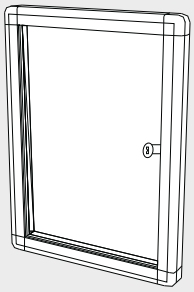

4 sizes available

HESSEN	SIZES
✻14.092	250x400mm
✻14.045	350x500mm
✻14.046	500x700mm
✻14.093	600x600mm

14.031
14.032
14.033

*magnet accessories available (not included)

MADE IN EUROPE

WISSMAR

INFORMATION * mm

This showcase with aluminium frame and lockable door includes a metallic background, where you can put your notes with magnet accesories (not included). Featuring a side locker and 3 sizes available. These enclosed bulletin boards provide a perfect display space for postings such as announcements or creative advertisements. These bulletin boards exhibit your important information in hallways, classrooms, vestibules, reception rooms or more! The single lockable door ensures that documents, graphics or pictures stay clean and undisturbed.

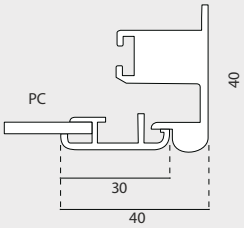

WISSMAR	SIZES
✻14.087	500x700mm
✻14.088	600x800mm
✻14.089	700x1000mm

14.031
14.032
14.033

*magnet accessories available (not included)

EN	Magnetic showcase for wall or floor. Tempered glass 3mm thickness and aluminum frame.
FR	Vitrine pour mur ou sol, avec fond magnétique. Cadre en aluminium et verre trempé de 3mm d'épaisseur.
PT	Vitrina magnética para parede ou chão. Marco de alumínio e vidro temperado de 3mm de espessura.
ES	Vitrina magnética, para su colocación en pared o suelo. Marco de aluminio y cristal templado de 3mm de espesor.

SHOWCASE METZ

side locker

INFORMATION * mm

The outdoor magnetic showcase Metz with aluminium frame and lockable door includes a side locker, . 5 sizes available. The hinge always is mounted on width dimension. The Base feet is sold separately.

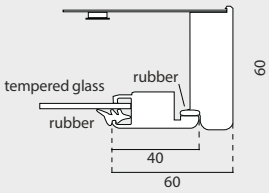

Aluminium thickness 1.5mm to 1.8mm

METZ	SIZES (WxH (Hinge always on Width))
14.058	1000x840mm
14.059	750x1090mm
14.060	750x660mm
14.061	1150x940mm
14.064	850x1240mm

BASE FEET

base feet includes:

2 aluminium poles, 2 endcaps
+ Anchor pieces

14.081	Height: 1950mm	x2

WHITEBOARD ACCESSORIES

magnets , pins and erasers for whiteboards

MAGNETS

14.031	Ø 20mm	x12	14.032	Ø 30mm	x6	14.033	Ø 40mm x4

PINS

100 units

14.034	100 units

ERASER

14.030

	EN	PT
	Carry bag included	Bolsa de transporte incluída
	One sided	Uma face
	Double-sided	Dupla face
	With motion	Com movimento
	With light	Com luz
LED	Led tecnology	Tecnologia led
	Telescopic	Telescópico
TEXTILE	Printed on textil	Impressão textil
	With lock	Com fechadura
	Rainproof	Impermeável
	For outdoor use	Para exterior
	With spotlights	Com focos
ADH	With adhesive	Com adesivo
	Cardboard	Cartão
	With suction pad	Com ventosa
NEW	New item	Novidade
	Lineweight	Peso extra
RESIST	Extraweight	Leve
flex	Flexible	Flexível
	Magnetic	Magnético
	Plug-in	Eléctrico
LARGE	Big sizes	De grandes dimensões
	Portrait	Vertical
	Landscape	Horizontal
	Portrait or landscape	Vertical ou horizontal
click	'Click' system	Sistema 'click'
Magic Tape	With 'magic tape'	Com 'magic tape'
acrylic	Acrylic	Acrílico
	Economic	Económico
	Tools required	Ferramentas necessárias
	No tools required	Ferramentas não necessárias
L	Capacity	Capacidade
	Request price for large quantity	Desconto por quantidade sob consulta
QTY	Quantity	Quantidade
NW	Net weight	Peso líquido
GW	Gross weight	Peso bruto
CBM	Cubic meter	Metro cúbico
Size	Measures	Medidas

1	VISUAL COMMUNICATION	COMUNICAÇÃO VISUAL
2	CARDBOARD	CARTÃO
3	EXHIBITION SOLUTIONS	SOLUÇÕES DE EXIBIÇÃO
4	CLICK FRAMES AND BROCHURE STANDS	MOLDURAS CLICK E SUPORTES DE BROCHURAS
5	OUTDOOR EVENTS	EVENTOS EXTERIORES
6	CABLE KIT	SISTEMAS DE CABO DE AÇO
7	BOARDS AND SHOWCASES	QUADROS E VITRINAS
8	ACRYLIC DISPLAYS	DISPLAYS DE ACRÍLICO
9	BARRIER POLES	POSTES PARA BARREIRAS
10	PLV	PONTOS DE VENDA
11	SIGNS	SINALÉTICA
12	SIGN ACCESSORIES	ACESSÓRIOS PARA SINALÉTICA

Visite o nosso site!
Visit our website.

COMUNICAÇÃO VISUAL . CARTÃO . SOLUÇÕES DE EXIBIÇÃO . MOLDURAS CLICK E SUPORTES PARA BROCCHURAS . EVENTOS NO EXTERIOR . SISTEMAS EM CABO DE AÇO . QUADROS E VITRINES . DISPLAYS EM ACRÍLICO . POSTES PARA BARREIRAS . PONTO DE VENDA . SINALÉTICA . ACESSÓRIOS PARA SINALÉTICA

VISUAL COMMUNICATION . CARDBOARD . EXHIBITION SOLUTIONS . CLICK FRAMES AND BROCHURE STANDS . OUTDOOR EVENTS . CABLE KIT . BOARDS AND SHOWCASES . ACRYLIC DISPLAYS . BARRIER POLES . PLV . SIGNS . SIGN ACCESSORIES

BANG DISPLAY display solutions

Spart CREATIVE DESIGN STUDIO

Rua Ribeira do Troca, Zona Industrial da Paiã,
Arm. 12B, 1675-086 Pontinha - PORTUGAL
+351 212 840 789 _ info@spart.pt

© 2018.Spart - Creative Design studio
Todos osdireitos reservados.
All rights reservated.

Preços válidos, salvo erros topográficos.
Preços sujeitos a alteração sem aviso prévio.
A reprodução parcial ou integral desta brochura é proibida.

www.spart.pt