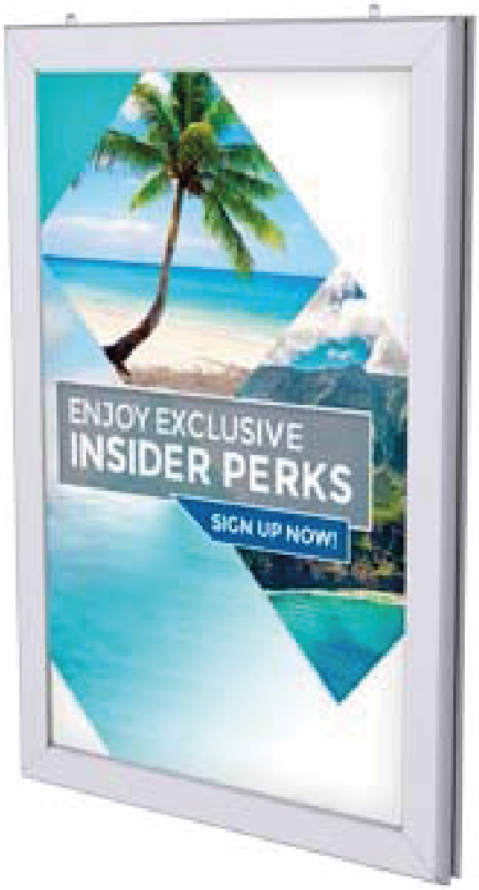

BANG DISPLAY display solutions

MOLDURAS CLIQUE E SUPORTES P/ BROCHURAS

LUBLIN

opening on the narrower side

quick and simple poster change

MADE IN EUROPE

frame done in anodized aluminium

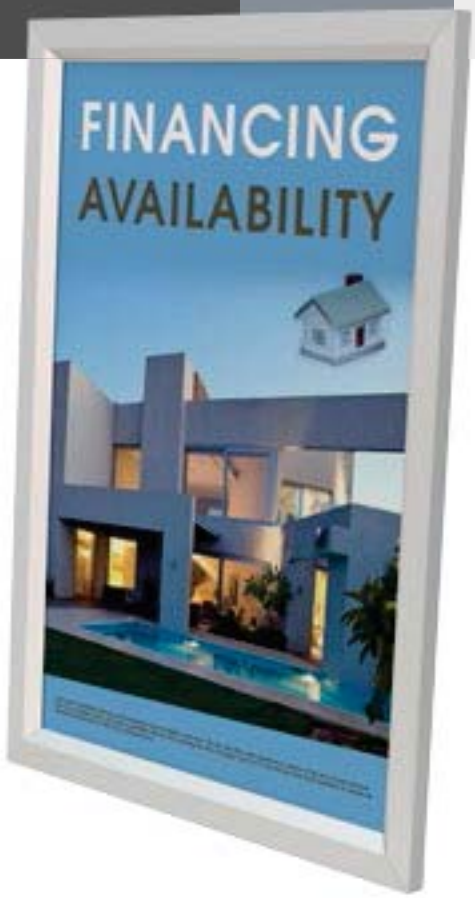

INFORMATION * W: Width H: Height D: Depth *mm

The Lublin frame is made of anodized aluminium. The change of graphic is really fast and easy, just insert your posters or graphics through the groove on the narrower side of the frame, this way, updating a presentation takes only a few seconds. Also, the screws and hangers for wall mounting are included. Lublin frame is ideal for restaurants, supermarkets, banks, movies theatres, airports, malls or any other location requiring frequent changes of posters.

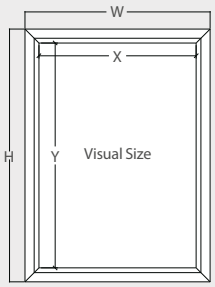

LUBLIN * W: Width H: Height D: Depth *mm

Ref.	Graphic Size	Visual (X-Y)	External (WxHxD)	Profile	Packing (QTY)	N.W	G.W	C.B.M	Size (WxHxD)
10.594	A4	203x288	233x318x11	15 / 10.35 / 28.25 — 15 / 5.75	1	0.3kg	0.4kg	0.0020	325x245x25
10.593	A3	290x411	320x441x11		1	0.5kg	0.65kg	0.0037	450x332x25
10.588	A2	454x626	404x576x15	25 / 12.1 / 41 — 25 / 7.4	1	1kg	1.3kg	0.0074	633x466x25
10.587	A1	628x872	578x822x15		1	1.7kg	2.25kg	0.0135	880x640x24

GAVARNIE

INFORMATION

The Gavarnie aluminum frame features a tension clip holder system. It can be mounted vertically or horizontally and updating a poster takes only a few seconds. 4 clips and 2 holders are included. Ideal for 2 way visibiltity places.

with clip holders

double sided

GAVARNIE * W: Width H: Height D: Depth *mm

Ref.	Graphic Size	External (WxHxD)	Packing (QTY)	N.W	G.W	C.B.M	Size (WxHxD)
10.508	A4	310x397	1	0.05kg	0.5kg	0.0009	80x380x30
10.507	A3	397x520	1	0.10kg	0.55kg	0.0012	80x510x30
10.506	A2	520x694	1	0.15kg	1.65kg	0.0016	80x680x30
10.505	A1	694x941	1	0.25kg	0.75kg	0.0022	80x940x30
10.509	A0	941x1289	1	0.30kg	1.05kg	0.0030	80x1280x30

EN The Click Frames are made of anodized aluminum with highly resistant extruded molding. Simple to mount due to its "click" closing system.

FR Cadres en aluminium anodisé avec moulure extrudé très résistant. Facile à monter grâce à son système "click". Existe en simple ou double face.

PT Moldura de alumínio anodizado com perfil extrusionado de alta qualidade. Simples de utilizar graças ao seu sistema de abertura click.

ES Marcos fabricados en aluminio anodizado con moldura extrusionada de gran resistencia. De fácil montaje gracias al sistema de cierre "click".

ECONOMIC

MARACAY

NEW

* W: Width H: Height D: Depth *mm

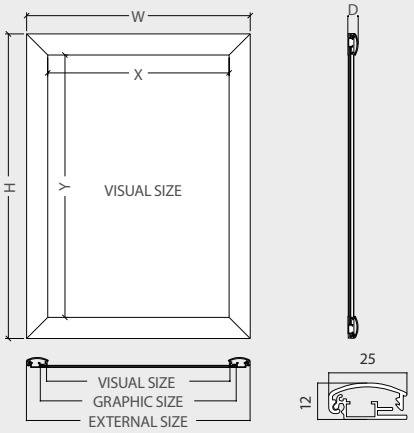

INFORMATION

The Maracay frame is economically priced because the profile is thinner and lightweight than other frames. Once this display is wall mounted though there is virtually no difference. Anti-reflective cover and screws are included. Perfect for restaurants, retail stores, community centers, theatres, airports, supermarkets.

MARACAY A4

* W: Width H: Height D: Depth *mm

	QTY	N.W	G.W	C.B.M	Size (WxHxD)
Packing	10	0.4kg	5.1kg	0.0205	355x210x275
	Visual (X-Y)		External (WxHxD)		
Product	196x282		246x332x13		

14.124 Graphic Size: A4

MARACAY A1

* W: Width H: Height D: Depth *mm

	QTY	N.W	G.W	C.B.M	Size (WxHxD)
Packing	5	1.5kg	11.7kg	0.0726	910x120x665
	Visual (X-Y)		External (WxHxD)		
Product	587x838		637x888x13		

14.121 Graphic Size: A1

MARACAY A3

* W: Width H: Height D: Depth *mm

	QTY	N.W	G.W	C.B.M	Size (WxHxD)
Packing	10	0.57kg	8.2kg	0.0363	480x210x360
	Visual (X-Y)		External (WxHxD)		
Product	284x409		334x507x13		

14.123 Graphic Size: A3

MARACAY H700

* W: Width H: Height D: Depth *mm

	QTY	N.W	G.W	C.B.M	Size (WxHxD)
Packing	10	1.22kg	14.7kg	0.0910	760x210x570
	Visual (X-Y)		External (WxHxD)		
Product	488x694		538x744x13		

14.126 Graphic Size: 500x700mm

MARACAY A2

* W: Width H: Height D: Depth *mm

	QTY	N.W	G.W	C.B.M	Size (WxHxD)
Packing	10	0.91kg	13.2kg	0.0672	660x210x485
	Visual (X-Y)		External (WxHxD)		
Product	406x587		456x637x13		

14.122 Graphic Size: A2

MARACAY H1000

* W: Width H: Height D: Depth *mm

	QTY	N.W	G.W	C.B.M	Size (WxHxD)
Packing	5	1.7kg	12.9kg	0.0979	1060x120x770
	Visual (X-Y)		External (WxHxD)		
Product	693x986		743x1036x13		

14.125 Graphic Size: 700x1000mm

MADE IN EUROPE

ANADIA

INFORMATION

* W: Width H: Height D: Depth

The Anadia frame is constructed from aluminum and has a matte silver finish. Just beneath the extruded aluminum frame sides are spring clips that are responsible for the Click spring-loaded action. Once they are pressed between the face frame and internal channel, instant spring-loaded tension is achieved. Insert your posters or graphics on top of the back panel, replace the lens, and flip the sides down to hold everything in place, so updating a presentation takes only a few seconds. It can be mounted vertically or horizontally, depending on your sign or advertisement. We supply this frame with the necessary screws and hangers for wall mounting. This Frame is perfect for being used in restaurants, retail stores, community centers, movie theatres, airports, supermarkets, banks or any other location requiring frequent changes of advertisements.

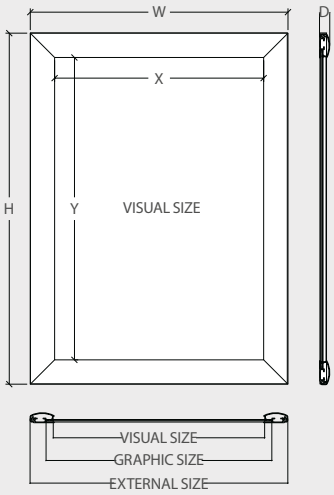

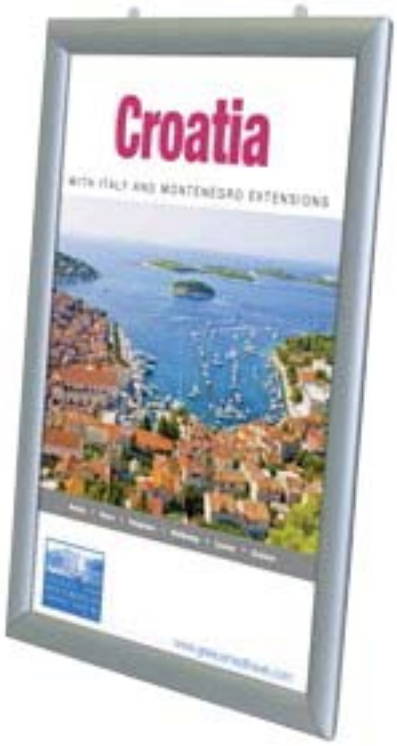

19mm 25mm 32mm 42mm

supplied with hangers

ANADIA

* W: Width H: Height D: Depth *mm

Ref.	Graphic Size	Visual (X-Y)	External (WxHxD)	Profile	Packing (QTY)	N.W	G.W	C.B.M	Size (WxHxD)
10.314	A4	199x286	237x324x12.50	19 / 12.5	1	0.4kg	0.5kg	0.024	270x350x25
10.315	A3	286x409	324x477x12.50		1	0.7kg	0.85kg	0.0061	365x480x35
10.316	A2	409x583	447x621x12.50		1	1kg	1.3kg	0.0067	475x645x22
10.317	500x700	489x689	527x727x12.50		1	1.3kg	1.7kg	0.0104	560x745x25
10.214	A4	190x278	242x329x12	25 / 12	1	0.45kg	0.55kg	0.0024	270x350x25
10.213	A3	278x401	329x452x12		1	0.65kg	0.85kg	0.0061	365x480x35
10.212	A2	401x575	452x626x12		1	1.05kg	1.35kg	0.0067	475x645x22
10.215	500x700	480x680	532x732x12		1	1.4kg	1.8kg	0.0104	560x745x25
10.290	A3	275x398	339x462x13.3	32 / 13.3	1	0.8kg	1.05kg	0.0061	365x480x35
10.291	A2	398x572	462x636x13.3		1	1.2kg	1.6kg	0.0067	475x645x22
10.292	A1	572x819	663x884x13.3		1	2kg	2.45kg	0.0143	645x886x25
10.293	500x700	478x678	542x742x13.3		1	1.5kg	2kg	0.0104	560x745x25
10.294	700x1000	678x978	742x1042x13.3		1	2.55kg	3.25kg	0.0197	1075x780x25
10.296	A0	821x1169	905x1253x14.5	42 / 14.5	1	4kg	5.04kg	0.0291	1265x920x25
10.295	700x1000	680x980	764x1064x14.5		1	3kg	3.75kg	0.0197	1075x780x25
10.297	1000x1400	980x1380	1064x1464x14.5		1	5.55kg	6.7kg	0.0398	1475x1080x25

MADE IN EUROPE

ANADIA DOUBLE-SIDED

silver anodized aluminium finish

INFORMATION

* W: Width H: Height D: Depth

The Double-sided Anadia frame is constructed from aluminum and has a matte silver finish. It can be mounted vertically or horizontally, depending on your sign or advertisement. We supply this frame with the necessary screws and hangers for hanging. Insert your posters or graphics on top of the back panel, replace the lens, and flip the sides down to hold everything in place, so updating a presentation takes only a few seconds. This frame features 2 ways visibility, increasing advertisement exposure. Ideal for hanging in a storefront window to advertise the passersby and customers within their institution, also this frame has a location flexibility, so users are no longer restricted to walls for posting signage. Hanging signage systems from the ceiling allow for placement overhead, in a central location. With this better space utilization, these window displays leave wall space open for exhibiting other advertisements or objects, so it's perfect for using in stores, community centers, airports, supermarkets, etc.

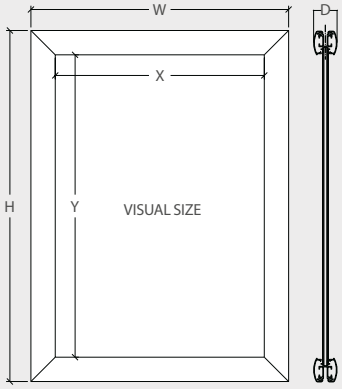

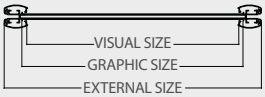

42mm 32mm

supplied with hangers

ANADIA DOUBLE-SIDED

* W: Width H: Height D: Depth *mm

Ref.	Graphic Size	Visual (X-Y)	External (WxHxD)	Profile	Packing (QTY)	N.W	G.W	C.B.M	Size (WxHxD)
10.299	A3	283x406	347x470x31.6	32 / 31.6	1	1.25kg	1.6kg	0.0061	480x365x35
10.300	A2	406x580	470x664x31.6		1	1.85kg	2.15kg	0.0127	485x655x40
10.302	A1	580x827	644x891x31.6		1	2.8kg	3.25kg	0.0235	660x890x40
10.303	500x700	486x686	550x750x31.6		1	2.3kg	2.8kg	0.0172	565x760x40
10.562	A0	807x1155	891x1239x33.9	42 / 33.9	1	4.7kg	6.2kg	0.0430	905x1250x38
10.566	700x1000	666x966	750x1050x33.9		1	4kg	4.85kg	0.0323	765x1055x40

MADE IN EUROPE

LIMA

INFORMATION

* W: Width H: Height D: Depth

The Lima frame is constructed from aluminum and has a matte silver finish. Just beneath the extruded aluminum frame sides are spring clips that are responsible for the Click spring-loaded action. Once they are pressed between the face frame and internal channel, instant spring-loaded tension is achieved. Insert your posters or graphics on top of the back panel, replace the lens, and flip the sides down to hold everything in place, so updating a presentation takes only a few seconds. It can be mounted vertically or horizontally, depending on your sign or advertisement. We supply this frame with the necessary screws and hangers for wall mounting. This Frame is perfect for being used in restaurants, retail stores, community centers, movie theatres, airports, supermarkets, banks or any other location requiring frequent changes of advertisements.

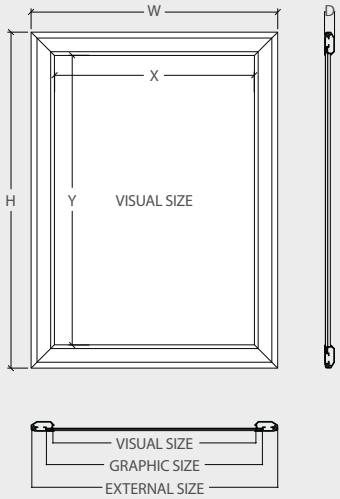

with anti-reflective plastic

silver anodized aluminium finish

19mm 25mm 32mm 42mm

supplied with hangers

LIMA

* W: Width H: Height D: Depth *mm

Ref.	Graphic Size	Visual (X-Y)	External (WxHxD)	Profile	Packing (QTY)	N.W	G.W	C.B.M	Size (WxHxD)
10.210	A4	199x286	237x324x11.95	19 / 11.95	1	0.4kg	0.5kg	0.0024	270x350x25
10.209	A3	286x409	324x477x11.95		1	0.7kg	0.85kg	0.0061	365x480x35
10.208	A2	409x583	447x621x11.95		1	1kg	1.3kg	0.0067	475x645x22
10.211	500x700	489x689	527x727x11.95		1	1.3kg	1.7kg	0.0104	560x745x25
10.260	A4	190x278	242x329x11.5	25 / 11.5	1	0.45kg	0.55kg	0.0024	270x350x25
10.259	A3	278x401	329x452x11.5		1	0.65kg	0.85kg	0.0061	365x480x35
10.258	A2	401x575	452x626x11.5		1	1.05kg	1.35kg	0.0067	475x645x22
10.261	500x700	480x680	532x732x11.5		1	1.4kg	1.8kg	0.0104	560x745x25
10.262	A3	275x398	339x462x13.75	32 / 13.75	1	0.8kg	1.05kg	0.0061	365x480x35
10.263	A2	398x572	462x636x13.75		1	1.2kg	1.6kg	0.0067	475x645x22
10.264	A1	572x819	663x884x13.75		1	2kg	2.45kg	0.0143	645x886x25
10.266	500x700	478x678	542x742x13.75		1	1.5kg	2kg	0.0104	560x745x25
10.267	700x1000	678x978	742x1042x13.75		1	2.6kg	3.5kg	0.0197	1075x780x25
10.270	A0	821x1169	905x1253x13.75	42 / 13.75	1	4kg	5.04kg	0.0291	1265x920x25
10.272	700x1000	680x980	764x1064x13.75		1	3kg	3.75kg	0.0197	1075x780x25
10.268	1000x1400	980x1380	1064x1464x13.75		1	5.5kg	6.7kg	0.0398	1475x1080x25

LIMA DOUBLE-SIDED

MADE IN EUROPE

with anti-reflective plastic

double sided

silver anodized aluminium finish

32mm 42mm

supplied with hangers

INFORMATION

* W: Width H: Height D: Depth

The Double-sided Lima frame is constructed from aluminum and has a matte silver finish. It can be mounted vertically or horizontally, depending on your sign or advertisement. We supply this frame with the necessary screws and hangers for hanging. Insert your posters or graphics on top of the back panel, replace the lens, and flip the sides down to hold everything in place, so updating a presentation takes only a few seconds. This frame features 2 ways visibility, increasing advertisement exposure. Ideal for hanging in a storefront window to advertise the passersby and customers within their institution, also this frame has a location flexibility, so users are no longer restricted to walls for posting signage. So hanging signage systems from the ceiling allow for placement overhead, in a central location. With this better space utilization, these window displays leave wall space open for exhibiting other advertisements or objects, so it's perfect for using in stores, community centers, airports, supermarkets, etc.

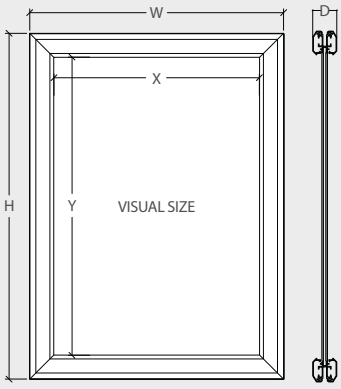

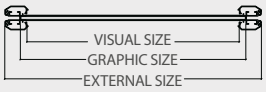

LIMA DOUBLE-SIDED

* W: Width H: Height D: Depth *mm

Ref.	Graphic Size	Visual (X-Y)	External (WxHxD)	Profile	Packing (QTY)	N.W	G.W	C.B.M	Size (WxHxD)
10.563	A3	283x406	347x470x32.39	32 / 32.39	1	1.25kg	1.6kg	0.0061	480x365x35
10.564	A2	406x580	470x664x32.39		1	1.85kg	2.15kg	0.0127	485x655x40
10.565	A1	580x827	644x891x32.39		1	2.8kg	3.25kg	0.0235	660x890x40
10.289	500x700	486x686	550x750x32.39		1	2.3kg	2.8kg	0.0172	565x760x40
10.257	A0	807x1155	891x1239x32.39	42 / 32.39	1	4.7kg	6.2kg	0.0430	905x1250x38
10.560	700x1000	666x966	750x1050x32.39		1	4kg	4.85kg	0.0323	765x1055x40

MADE IN EUROPE

LIMA LOCKABLE

with anti-reflective plastic

INFORMATION

* W: Width H: Height D: Depth

The Lima frame is constructed from aluminum and has a matte silver finish. Just beneath the extruded aluminum frame sides are spring clips that are responsible for the Click spring-loaded action. Insert your posters or graphics on top of the back panel, replace the lens, and flip the sides down to hold everything in place, so updating a presentation takes only a few seconds. It can be mounted vertically or horizontally, depending on your sign or advertisement. The front-loading frame can be secured shut with an Allen key to keep posters protected. We supply this frame with the necessary screws and hangers for wall mounting. This Frame is perfect for being used in restaurants, retail stores, community centers, movie theatres, airports, supermarkets, banks or any other location requiring frequent changes of advertisements.

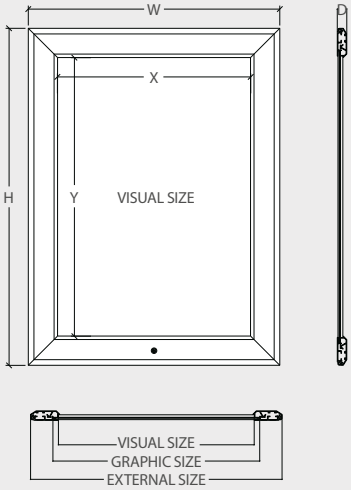

lockable

42mm

supplied with hangers

LIMA LOCKABLE

* W: Width H: Height D: Depth *mm

Ref.	Graphic Size	Visual (X-Y)	External (WxHxD)	Profile	Packing (QTY)	N.W	G.W	C.B.M	Size (WxHxD)
10.280	A1	574x821	658x905x13.75	42 / 13.75	1	2.3kg	3.1kg	0.0153	672x912x25
10.281	A0	821x1169	905x1253x13.75		1	4kg	5.04kg	0.0291	1265x920x65
10.282	500x700	480x680	564x764x13.75		1	1.8kg	2.35kg	0.0112	580x771x25
10.283	700x1000	680x980	764x1064x13.75		1	3kg	3.75kg	0.0191	1075x780x25
10.278	1000x1400	980x1380	1064x1464x13.75		1	5.55kg	6.7kg	0.0398	1475x1080x25

MADE IN EUROPE

LIMA WATERPROOF

waterproof

with anti-reflective plastic

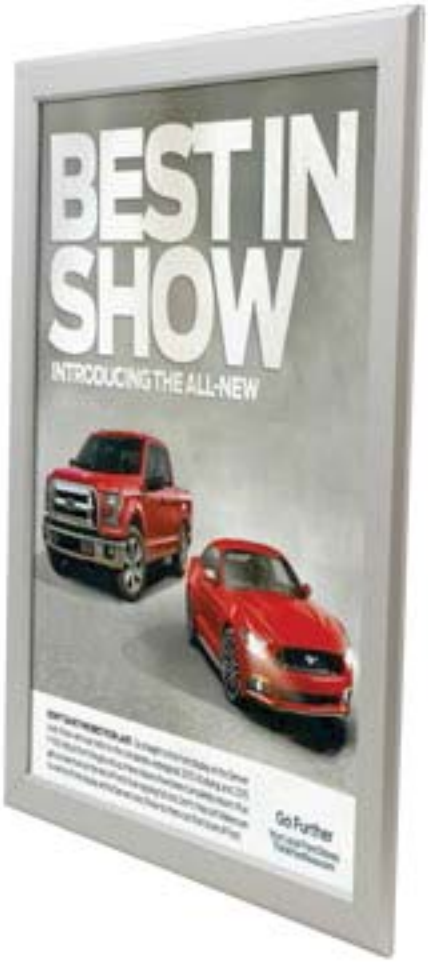

INFORMATION

* W: Width H: Height D: Depth

The Lima frame is constructed from aluminum and has a matte silver finish. Just beneath the extruded aluminum frame sides are spring clips that are responsible for the Click spring-loaded action. Insert your posters or graphics on top of the back panel, replace the lens, and flip the sides down to hold everything in place, so updating a presentation takes only a few seconds. It can be mounted vertically or horizontally, depending on your sign or advertisement. The front-loading frame can be secured shut with an Allen key to keep posters protected. We supply this frame with the necessary screws and hangers for wall mounting. This Frame is perfect for being used in restaurants, retail stores, community centers, movie theatres, airports, supermarkets, banks or any other location requiring frequent changes of advertisements.

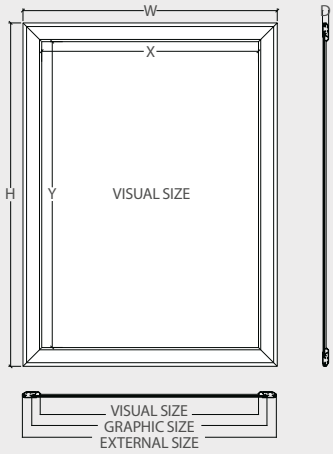

42mm

supplied with hangers

LIMA WATERPROOF

* W: Width H: Height D: Depth *mm

Ref.	Graphic Size	Visual (X-Y)	External (WxHxD)	Profile	Packing (QTY)	N.W	G.W	C.B.M	Size (WxHxD)
10.285	A1	580x827	664x911x13.75	42 / 13.75	1	2kg	2.5kg	0.0153	672x912x25
10.286	A0	827x1175	911x1259x13.75		1	4kg	5.04kg	0.0291	1265x920x25
10.287	500x700	486x686	570x770x13.75		1	1.65kg	2.01kg	0.0104	560x745x25
10.288	700x1000	686x986	770x1070x13.75		1	3.05kg	3.48kg	0.0191	1075x780x25
10.561	1000x1400	986x1386	1070x1470x13.75		1	5.55kg	6.7kg	0.0398	1475x1080x25

SERENA

MADE IN EUROPE

32mm

supplied with hangers

with anti-reflective plastic cover

INFORMATION

* W: Width H: Height D: Depth *mm

The Serena aluminum frame features a stylish bicolor design. It has a 32mm width profile which features click closing system. Just beneath the extruded aluminum frame sides are spring clips that are responsible for the Click spring-loaded action. Once they are pressed between the face frame and internal channel, instant spring-loaded tension is achieved. Insert your posters or graphics on top of the back panel, replace the lens, and flip the sides down to hold everything in place, so updating a presentation takes only a few seconds. It can be mounted vertically or horizontally, depending on your sign or advertisement. Featuring 5 standard sizes available. Due to its elegant appearance the single-sided frame Serena is ideal for restaurants, hotels, theatres, offices, malls or any other location requiring a distinctive look on the frames or a frequent changes of posters. Also, Protective anti-reflection cover, screws and hangers are included.

* W: Width H: Height D: Depth *mm

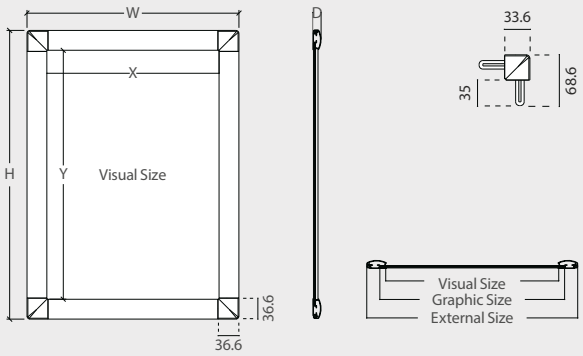

SERENA

* W: Width H: Height D: Depth *mm

Ref.	Graphic Size	Visual (X-Y)	External (WxHxD)	Profile	Packing (QTY)	N.W	G.W	C.B.M	Size (WxHxD)
10.405	A4	188x275	252x339x13.35	32 / 13.35	1	0.4kg	0.5kg	0.0024	270x25x350
10.404	A3	275x398	339x462x13.35		1	0.7kg	0.95kg	0.0042	475x22x355
10.403	A2	398x572	462x636x13.35		1	1.05kg	1.45kg	0.0067	475x22x645
10.408	500x700	478x678	542x742x13.35		1	1.35kg	1.85kg	0.0104	560x25x745
10.163	700x1000	678x978	742x1042x13.35		1	2.35kg	3.05kg	0.0197	1075x25x780

GET 6 CORNER COLORS WITH 1 FRAME!

MADE IN EUROPE

RAINBOW FRAME

NEW

INCLUDES 4 GREY CORNERS AND 20 COLORED COVERS

INFORMATION

* W: Width H: Height D: Depth *mm

The Rainbow aluminum frame features 4 grey corners + 20 colored covers. It has a 32mm width profile which features click closing system. Just beneath the extruded aluminum frame sides are spring clips that are responsible for the Click spring-loaded action. Once they are pressed between the face frame and internal channel, instant spring-loaded tension is achieved. Insert your posters or graphics on top of the back panel, replace the lens, and flip the sides down to hold everything in place, so updating a presentation takes only a few seconds. It can be mounted vertically or horizontally, depending on your sign or advertisement. Featuring 5 standard sizes available. Due to its elegant appearance the single-sided frame Rainbow is ideal for restaurants, hotels, theatres, offices, malls or any other location requiring a distinctive look on the frames or a frequent changes of posters. Also, Protective anti-reflection cover, screws and hangers are included.

* W: Width H: Height D: Depth *mm

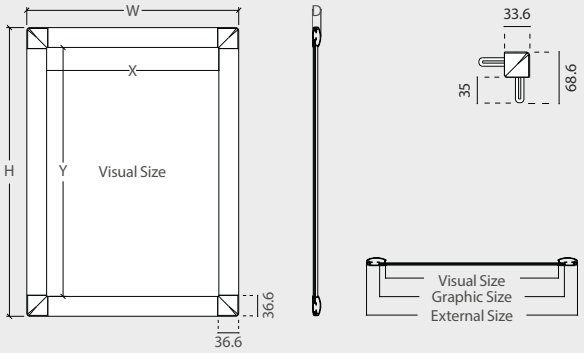

32mm

with anti-reflective plastic cover

supplied with hangers

RAINBOW

* W: Width H: Height D: Depth *mm

Ref.	Graphic Size	Visual (X-Y)	External (WxHxD)	Profile	Packing (QTY)	N.W	G.W	C.B.M	Size (WxHxD)
13.590	A4	188x275	252x339x13.35	32 / 13.35	1	0.4kg	0.5kg	0.0024	270x25x350
13.591	A3	275x398	339x462x13.35		1	0.7kg	0.95kg	0.0042	475x22x355
13.592	A2	398x572	462x636x13.35		1	1.05kg	1.45kg	0.0067	475x22x645
13.593	500x700	478x678	542x742x13.35		1	1.35kg	1.85kg	0.0104	560x25x745
13.754	700x1000	678x978	742x1042x13.35		1	2.35kg	3.05kg	0.0197	1075x25x780

MADE IN EUROPE

with anti-reflective plastic

ISCAR COVER FRAME

NEW

supplied with hangers and screws

* W: Width H: Height D: Depth *mm

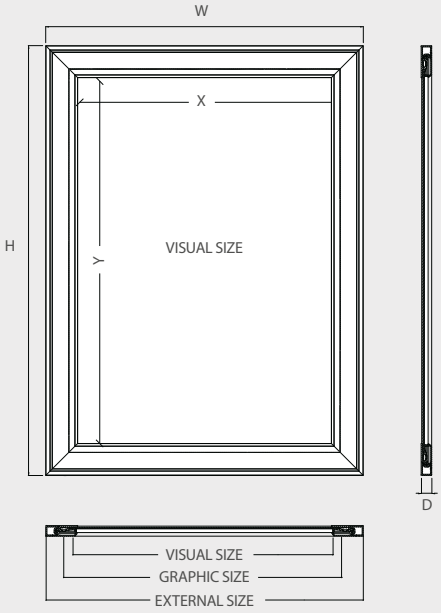

INFORMATION

The Iscar aluminum frame features a stylish design with double-framed appearance. It has a 34.5mm width profile which features click closing system. Just beneath the extruded aluminum frame sides are spring clips that are responsible for the Click spring-loaded action. Once they are pressed between the face frame and internal channel, instant spring-loaded tension is achieved. Insert your posters or graphics on top of the back panel, replace the lens, and flip the sides down to hold everything in place, so updating a presentation takes only a few seconds. It can be mounted vertically or horizontally, depending on your sign or advertisement. Featuring 5 standard sizes available. Due to its elegant appearance the double-sided frame Iscar is ideal for restaurants, hotels, theatres, offices, malls or any other location requiring a distinctive look on the frames or a frequent changes of posters. Also, Protective anti-reflection cover, screws and hangers are included.

ISCAR

* W: Width H: Height D: Depth *mm

Ref.	Graphic Size	Visual (X-Y)	External (WxHxD)	Profile	Packing (QTY)	N.W	G.W	C.B.M	Size (WxHxD)
13.635	A3	278.2x401	346x471x11.5		1	1.04kg	1.19kg	0.0044	485x365x25
13.636	A2	401x575	471x645x11.5	34.9	1	1.52kg	1.78kg	0.0080	660x485x25
13.637	A1	575x822	645x892x11.5	11.5	1	2.34kg	2.78kg	0.0149	905x660x25
13.638	500x700mm	461x681	551x751x11.5		1	1.87kg	2.20kg	0.0108	765x565x25
13.639	700x1000mm	681x981	751x1051x11.5		1	2.95kg	3.54kg	0.0204	1065x765x25

MADE IN EUROPE

TRUJILLO

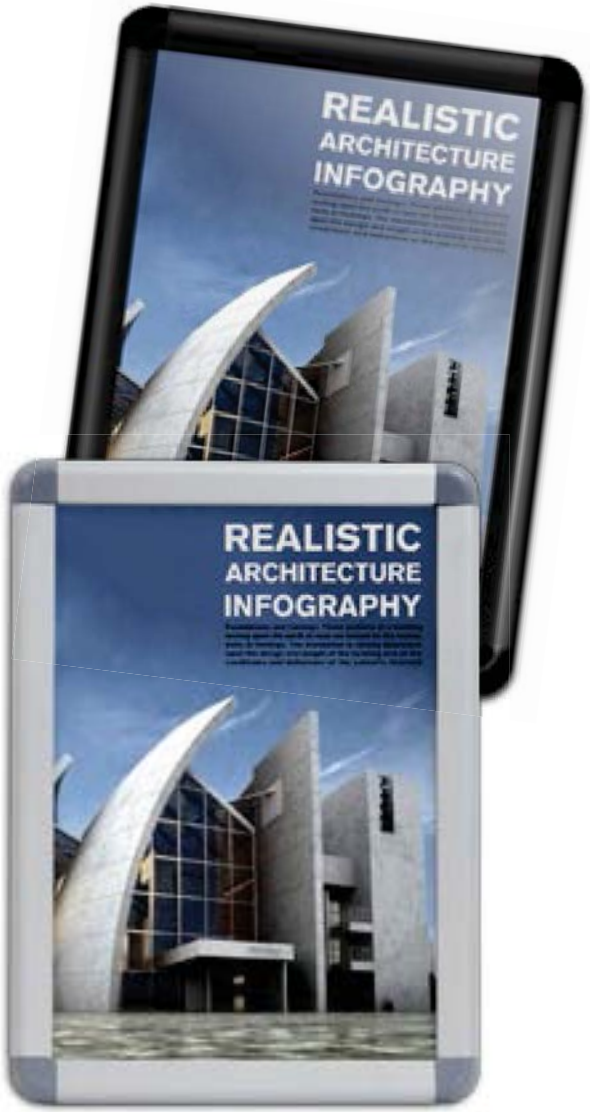

INFORMATION

* W: Width H: Height D: Depth ***mm**

The Trujillo aluminum frame features a stylish bicolor design with rounded corners. It can be mounted vertically or horizontally and updating a poster takes only a few seconds. 4 colors available upon request. Ideal for restaurants, markets, malls or any other location requiring frequent changes of posters. Screws and hangers included.

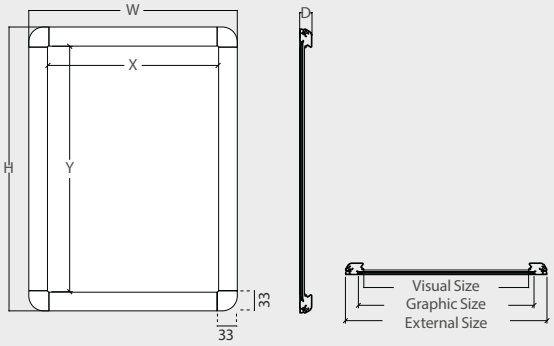

Ral 3020 Ral 5002
Ral 6029 Wood Color

Upon request. Mediante consulta.
Sur demande. Bajo pedido.

TRUJILLO

* W: Width H: Height D: Depth ***mm**

Ref.	Graphic Size	Visual (X-Y)	External (WxHxD)	Profile	Packing (QTY)	N.W	G.W	C.B.M	Size (WxHxD)
10.131	A3	278x402	344x468x20.3	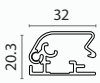	1	1kg	1.2kg	0.0061	365x480x35
10.132	A2	402x575	468x641x20.3		1	1.65kg	2.15kg	0.0127	485x655x40
10.133	A1	575x822	641x888x20.3		1	2.4kg	3.2kg	0.0235	660x890x40
10.134	A0	822x1170	888x1236x20.3		1	4.4kg	5.45kg	0.0430	1250x905x38
10.135	500x700	481x681	547x747x20.3		1	1.95kg	2.4kg	0.0104	560x745x25
10.136	700x1000	681x981	747x1047x20.3		1	3.25kg	4kg	0.0323	765x1055x40

TARNOW

ideal for foamboard

MADE IN EUROPE

5mm maximum thickness of graphic

NEW

supplied with corner connections and allen key

INFORMATION * W: Width H: Height D: Depth *mm

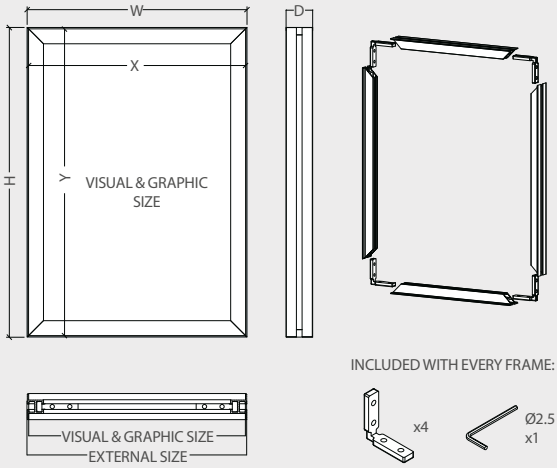

The Tarnow aluminum frame features a silver or a stunning black finished design for being used with foamboard graphics. It can be mounted vertically or horizontally and updating a poster is simple and fast. 7 standard sizes are available. Corner connections and Allen key are included. The maximum panel or foam thickness is 5mm. The Tarnow frame is ideal for restaurants, hotels, theatres, offices, malls or any other location requiring a distinctive look on the frames or a frequent changes of posters.

TARNOW * W: Width H: Height D: Depth *mm

Ref.	Graphic Size	Visual (X-Y)	External (WxHxD)	Profile	Packing (QTY)	N.W	G.W	C.B.M	Size (WxHxD)
13.628	A4	297x210	213x300x25.3		1	0.34kg	0.42kg	0.0025	315x230x35
13.629	A3	420x297	300x423x25.3		1	0.45kg	0.58kg	0.0048	435x315x35
13.630	A2	594x420	423x597x25.3	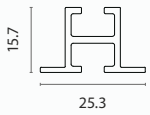	1	0.59kg	0.82kg	0.0094	610x440x35
13.631	A1	841x594	597x844x25.3		1	0.80kg	1.21kg	0.0185	860x615x35
13.632	A0	1189x841	844x1192x25.3		1	1.10kg	1.89kg	0.0309	1025x860x35
13.633	500x700	500x700	503x703x25.3		1	0.69kg	1.01kg	0.0130	715x520x35
13.634	700x1000	700x1000	703x1003x25.3		1	0.93kg	1.5kg	0.0256	1015x720x35

CLICK BOARDS

EN	Clickboards made of aluminium with plastic parts. Includes anti-reflective protector cover. Suitable for indoor or outdoor uses.
FR	Chevalet en aluminium avec cadre click. Antireflet inclus, idéal pour une utilisation intérieur ou extérieur.
PT	Expositores com um ou mais marcos. Disponível em uma face ou em dupla face. Perfis de alumínio. Pode ser usado no interior ou exterior.
ES	Caballetes fabricados en aluminio con partes plásticas. Incluye plástico protector de gráfica. Adecuados para uso exterior o interior.

ECONOMIC

BAYONNE

INFORMATION

* W: Width H: Height D: Depth * mm

This A-frame board is made of aluminum so it is lightweight and resistant to rusting. It has feet protection to avoid slipping and also a 30.5mm width profile with click system, so the graphic change is quick and simple. Also, it includes a weather resistant antireflection sheet so is also non-glare which allows it to be read under bright lights. With its 2-sided folding frame, Bayonne A-Board is ideal for advertising sales or special promotions outside your store.

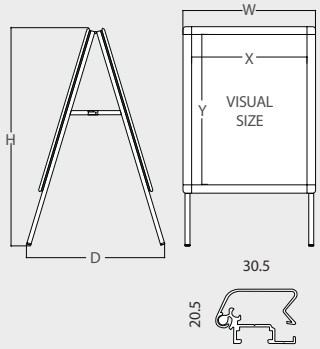

BAYONNE H700

* W: Width H: Height D: Depth *mm

	QTY	N.W	G.W	C.B.M	Size (WxHxD)
Packing	1	4.85kg	6.5kg	0.068	509x1120x120
	Visual (X-Y)		External (WxHxD)		
Product	485x685		545x1030x532		
10.804	Graphic Size: 500x700mm				

BAYONNE H1000

* W: Width H: Height D: Depth *mm

	QTY	N.W	G.W	C.B.M	Size (WxHxD)
Packing	1	7.64kg	9.6kg	0.127	795x1400x115
	Visual (X-Y)		External (WxHxD)		
Product	687x988		745x1330x605		
10.805	Graphic Size: 700x1000mm				

BAYONNE A1

* W: Width H: Height D: Depth *mm

	QTY	N.W	G.W	C.B.M	Size (WxHxD)
Packing	1	6.7kg	8.5kg	0.101	695x1220x120
	Visual (X-Y)		External (WxHxD)		
Product	580x830		640x1170x540		
13.145	Graphic Size: A1				

BAYONNE A0

* W: Width H: Height D: Depth *mm

	QTY	N.W	G.W	C.B.M	Size (WxHxD)
Packing	1	10.2kg	12.45kg	0.175	930x1575x120
	Visual (X-Y)		External (WxHxD)		
Product	825x1170		885x1520x585		
13.146	Graphic Size: A0				

ANTIREFLECTION SHEET

EN	Antireflection sheet for snapframe.
FR	Antireflet pour cadres ou chevalets.
PT	Película anti-reflexo para marcos e cavaletes.
ES	Antireflex para marcos y caballetes.

Ref.	Size
10.952	500x700mm
10.953	700x1000mm
10.992	A1 | 598x838mm
10.993	A0 | 838x1188mm

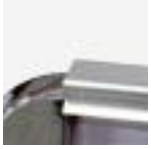

ECONOMIC

NIZA

INFORMATION * W: Width H: Height D: Depth * mm

This frame board is made of aluminum so it is lightweight and resistant to rusting. It has a 30.5mm width profile with click system, so the graphic change is quick and simple. With its single-sided folding frame, Niza A-Board is ideal for advertising outside your store, like restaurants, street stalls or supermarkets. It includes a weather resistant antireflection sheet so is also non-glare which allows it to be read under bright lights.

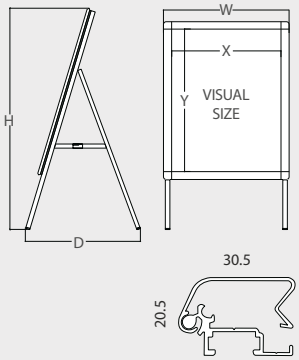

with PVC anti-glare poster cover

one sided

NIZA * W: Width H: Height D: Depth *mm

	QTY	N.W	G.W	C.B.M	Size (WxHxD)
Packing	1	5kg	7kg	0.075	580x1080x120
	Visual (X-Y)		External (WxHxD)		
Product	485x685		540x1060x440		
10.808	Graphic Size: 500x700mm				

MADE IN EUROPE

GRENOBLE

INFORMATION * W: Width H: Height D: Depth * mm

Grenoble is a small dimensions A-frame board, which is made of aluminum so it is lightweight and resistant to rusting. It has a 32mm width profile with click system, so the graphic change is quick and simple. With its dimensions and 2-sided folding structure, Grenoble is ideal for advertising your upcoming events, shows, menu or last offers outside your shop. It includes a weather resistant antireflection sheet so is also non-glare which allows it to be read under bright lights.

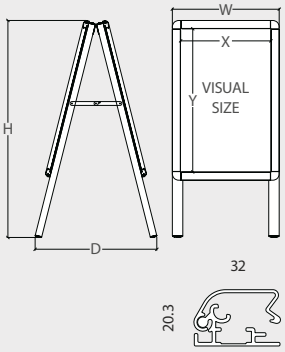

GRENOBLE * W: Width H: Height D: Depth *mm

	QTY	N.W	G.W	C.B.M	Size (WxHxD)
Packing	1	4.3kg	5kg	0.0374	425x880x100
	Visual (X-Y)		External (WxHxD)		
Product	341x541		404x815x456		
10.942	Graphic Size: 340x540mm				

MERIDA

MADE IN EUROPE

highly resistant

double sided

INFORMATION

* W: Width H: Height D: Depth * mm

This A-frame board is made of aluminum so it is lightweight and very resistant to rusting. It has feet protection to avoid slipping and also a 32mm width profile with click system, so the graphic change is quick and simple. Also it includes a weather resistant antireflection sheet so is also non-glare which allows it to be read under bright lights. With its 2-sided folding frame, Merida Click A-Board is ideal for advertising sales, promotions outside or inside your business.

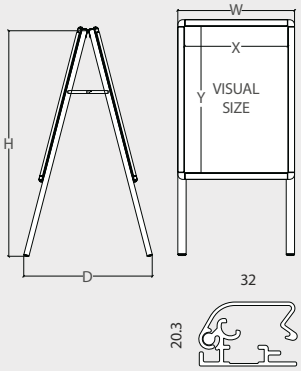

click system

32mm

anti-reflective plastic

also more colors available

Ral 3020 Ral 5002
Ral 6029 Wood Color

Upon request.
Sur demande.
Mediante consulta.
Disponible bajo pedido.

MERIDA A1

* W: Width H: Height D: Depth *mm

	QTY	N.W	G.W	C.B.M	Size (WxHxD)
Packing	1	7.92kg	9.69kg	0.098	660x1420x105
	Visual (X-Y)		External (WxHxD)		
Product	575x822		638x1400x698		

10.337
10.119N

Graphic Size: A1

MERIDA H700

* W: Width H: Height D: Depth *mm

	QTY	N.W	G.W	C.B.M	Size (WxHxD)
Packing	1	5.64kg	6.7kg	0.072	575x1100x115
	Visual (X-Y)		External (WxHxD)		
Product	481x681		544x1050x598		

10.338
10.122N

Graphic Size: 500x700mm

MERIDA H1000

* W: Width H: Height D: Depth *mm

	QTY	N.W	G.W	C.B.M	Size (WxHxD)
Packing	1	8.94kg	10.67kg	0.127	765x1445x115
	Visual (X-Y)		External (WxHxD)		
Product	681x981		744x1400x799		

10.339
10.124N

Graphic Size: 700x1000mm

click system

highly resistant

anti-reflective plastic

double sided

42mm

MONTANCHEZ

MADE IN EUROPE

non-slip leveling feet

INFORMATION

* W: Width H: Height D: Depth * mm

This A-Board frame is made of aluminum over a steel structure so this way, its extra weight gives a great stability and it's very resistant to rusting. It has non-slip leveling feet and also a 42mm width profile with click system, so the graphic change is quick and simple. With its double-sided folding frame, Montanchez is designed especially for outdoor use so it's perfect for advertising sales and promotions outside your store. It includes a weather resistant antireflection sheet so is also non-glare which allows it to be read under bright lights.

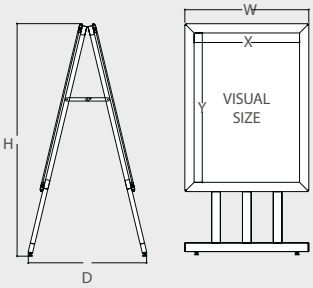

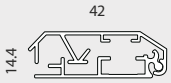

MONTANCHEZ H700

* W: Width H: Height D: Depth *mm

	QTY	N.W	G.W	C.B.M	Size (WxHxD)
Packing	1	11.95kg	13.1kg	0.070	560x1090x115
	Visual (X-Y)		External (WxHxD)		
Product	480x660		564x1052x524		
10.127	Graphic Size: 650x700mm				

MONTANCHEZ H1000

* W: Width H: Height D: Depth *mm

	QTY	N.W	G.W	C.B.M	Size (WxHxD)
Packing	1	17.25kg	19.3kg	0.121	880x1375x100
	Visual (X-Y)		External (WxHxD)		
Product	680x960		764x1402x525		
10.128	Graphic Size: 960x1000mm				

MONTANCHEZ H1400

* W: Width H: Height D: Depth *mm

	QTY	N.W	G.W	C.B.M	Size (WxHxD)
Packing	1	25.5kg	28.5kg	0.1886	1100x1805x98
	Visual (X-Y)		External (WxHxD)		
Product	980x1360		1064x1802x566		
10.129	Graphic Size: 1360x1400mm				

PORTABLE LED LAMP

NEW

LED

INFORMATION * W: Width H: Height D: Depth * mm

The Portable and rechargable 1.8W LED Lamp is a very useful accessory for any display, has an autonomy of more than 6 hours and three levels of brightness (featuring a charging indicator display). With a stunning black finish, this portable LED Lamp will add a touch of distinction and functionality to your display. Thanks to its low consumption and its high strength clamp (3-4cm maximum grip) it can be coupled to a wide range of display products, among them Frame Boards, Blackboards, Photocalls, Lecterns or Counters.

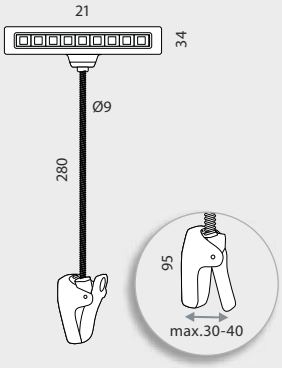

PORTABLE SPOTLIGHT * W: Width H: Height D: Depth *mm

	QTY	N.W	G.W	C.B.M	Size (WxHxD)
Packing	1	0.30kg	0.40kg	0.00174	110x227x70

13.642

13.641
WOODEN FAST LECTERN
LECTERNS
Chapter 4

10.996
STEEL DISPLAY
POSTER DISPLAY
Chapter 1

14.111
A-BOARD SPECIAL TOP
BLACKBOARDS
Chapter 7

DIJON

INFORMATION * W: Width H: Height D: Depth * mm

The Dijon aluminum A-board is designed for outdoor use so it's perfect for advertising sales and promotions outside inside your store. It has a 32mm width profile with click system, so the graphic change is quick and simple. Thanks to its double-sided frame and its high this A-Board is ideal for advertising offers, menus, information maps, etc. It includes a weather resistant antireflection sheet so is also non-glare which allows it to be read under bright lights.

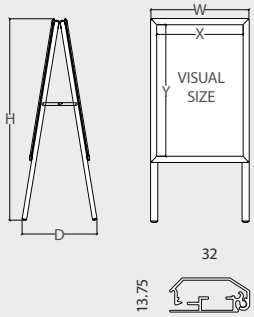

DIJON H700					* W: Width H: Height D: Depth *mm
	QTY	N.W	G.W	C.B.M	Size (WxHxD)
Packing	1	5kg	6.5kg	0.0877	580x1120x135
	Visual (X-Y)		External (WxHxD)		
Product	478x678		542x1038x414		
10.558	Graphic Size: 500x700mm				

DIJON A1					* W: Width H: Height D: Depth *mm
	QTY	N.W	G.W	C.B.M	Size (WxHxD)
Packing	1	6.4kg	8.5kg	0.0984	660x1420x105
	Visual (X-Y)		External (WxHxD)		
Product	572x819		636x1382x536		
10.557	Graphic Size: A1				

DIJON H1000					* W: Width H: Height D: Depth *mm
	QTY	N.W	G.W	C.B.M	Size (WxHxD)
Packing	1	7.9kg	9.65kg	0.1562	790x1465x135
	Visual (X-Y)		External (WxHxD)		
Product	678x978		742x1382x536		
10.559	Graphic Size: 700x1000mm				

BELMEZ

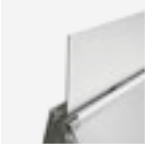

INFORMATION * W: Width H: Height D: Depth * mm

This double-sided board is made of aluminum so it is lightweight and resistant to rusting. It has a 21mm width profile with click system, so the graphic change is quick and simple. Features a headboard support for displaying company logos or graphs. Ideal for outside or inside your store, restaurant, street stall or supermarket. It includes a weather resistant antireflection sheet so is also non-glare which allows it to be read under bright lights.

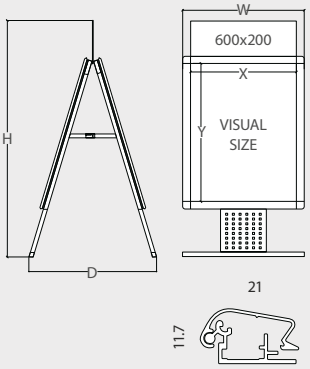

EN	Headboard for graphic included.
FR	Support supérieur pour visuel inclus.
PT	Inclui suporte para cartaz superior.
ES	Con soporte para cartel superior.

BELMEZ					* W: Width H: Height D: Depth *mm
	QTY	N.W	G.W	C.B.M	Size (WxHxD)
Packing	1	13.9kg	15.7kg	0.1085	690x1210x130
	Visual (X-Y)		External (WxHxD)		
Product	581x828		647x1160x625		
10.235	Graphic Size: A1				

TOULOUSE

* W: Width H: Height D: Depth * mm

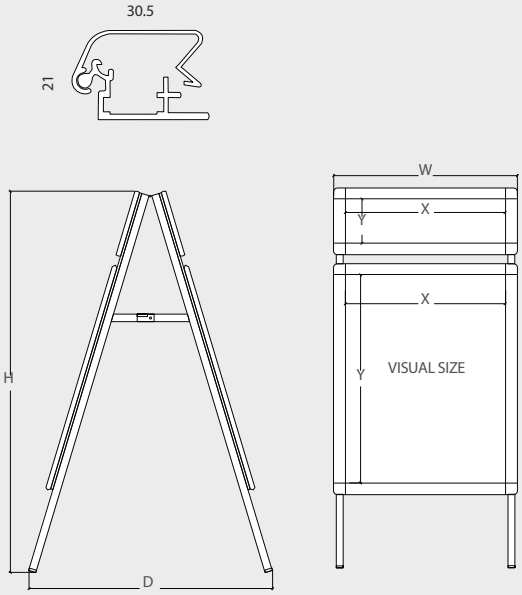

ECONOMIC

with upper head frame

double sided

INFORMATION

This double sided A-board frame is made of aluminum so it is lightweight and resistant. It has a 30.5mm width profile with click system, so the graphic change is quick and simple. Also it includes a resistant antireflection sheet so is also non-glare which allows it to be read under bright lights. Features a headboard support for displaying company logos or graphs. Ideal for displaying sales or promotions at restaurants, stores, shops or supermarkets.

quick graphic change

TOULOUSE					* W: Width H: Height D: Depth *mm
	QTY	N.W	G.W	C.B.M	Size (WxHxD)
Packing	1	9kg	11kg	0.1010	610x120x1380
	Board Visual (X-Y)		Upper Visual (X-Y)		External (WxHxD)
Product	485x685		485x185		545x1210x630
10.806	Board Graphic Size: 500x700mm		Upper Graphic Size: 500x200mm		

MADE IN EUROPE

POZNAN

double sided

INFORMATION * W: Width H: Height D: Depth * mm

The Poznan A-board frame is made of aluminum so it is lightweight and resistant to rusting. It has a 32mm width profile with click system, so the graphic change is quick and simple. Thanks its double-sided frame and its 1800mm height this A-Board is ideal for advertising large offers, menus, information maps, etc, outside or inside your business. It includes a weather resistant antireflection sheet so is also non-glare which allows it to be read under bright lights.

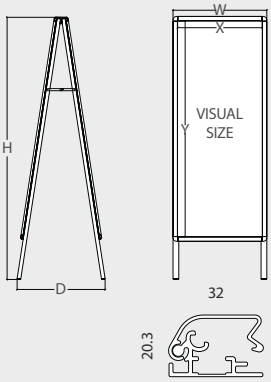

32mm

POZNAN * W: Width H: Height D: Depth *mm

	QTY	N.W	G.W	C.B.M	Size (WxHxD)
Packing	1	12.9kg	14.8kg	0.177	705x1860x135
	Visual (X-Y)		External (WxHxD)		
Product	581x1481		644x1800x600		
10.343	Graphic Size: 600x1500mm				

RESIST

MADE IN EUROPE

MOTA

one sided

suitable for indoor or outdoor use

25mm

quick and simple change of graphic

INFORMATION * W: Width H: Height D: Depth * mm

This aluminium A-Board is very lightweight, foldable for an easy storage and very resistant to rusting. It features a 25mm width profile with click system, so the graphics change is quick and very simple. Also it includes a weather resistant antireflection sheet so is also non-glare which allows it to be read under bright lights. The Mota A-Board features 4 Click A3 frames so it is ideal for advertising sales or special promotions inside or outside your business. It's perfect for restaurants, stalls, stores or for any marketplace.

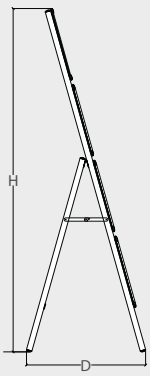

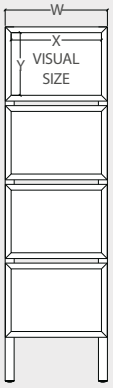

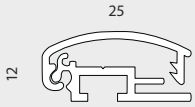

MOTA * W: Width H: Height D: Depth *mm

	QTY	N.W	G.W	C.B.M	Size (WxHxD)
Packing	1	5.7kg	7kg	0.0902	500x1640x110
	Visual (X-Y)		External (WxHxD)		
Product	278x401		450x1530x490		

10.216 Graphic Size: A3 x4

ALMENDRALEJO

EN 3 options available: 6xA6 holders or 4xA5 holders or 3xA4 holders.

FR 3 configurations de porte brochure à choisir : 6xA6, 4xA5 ou 3xA4.

PT 3 opções de porta folhetos à escolha: 6xA6, 4xA5, 3xA4

ES 3 configuraciones: 6 cajetines A6 o 4 cajetines A5 o 3 cajetines A4.

MADE IN EUROPE

INFORMATION

* W: Width H: Height D: Depth * mm

The Almendralejo mobile board is designed to be used with brochure advertising. It has a 32mm width profile with click system, so the graphic change is quick and simple and it takes only a few minutes. Also it includes a resistant antireflection sheet and brake wheels, so it is very simple and comfortable to move. This mobile board is ideal for tradeshows, exhibitions, clinics, academies, highly-populated lobbies, travel agencies, libraries or waiting rooms to provide reading material to visiting clients.

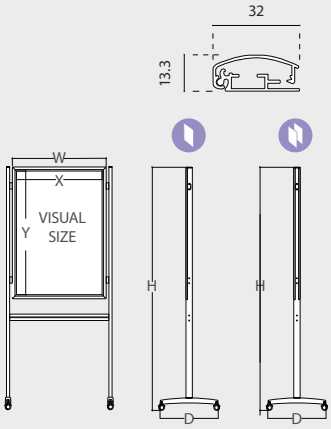

BROCHURE HOLDERS OPTIONS

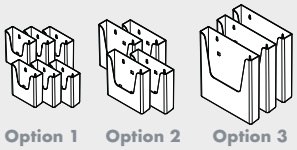

Option 1 A6x6 **Option 2 A5x4** **Option 3 A4x3**

You can choose between 3 options to set-up your brochure holders:

- 6 Brochure Holders A6 size format.
- 4 Brochure Holders A5 size format.
- 3 Brochure Holders A4 size format.

ALMENDRALEJO

* W: Width H: Height D: Depth *mm

	QTY	N.W	G.W	C.B.M	Size (WxHxD)
Packing	1	8.6kg	10.9kg	0.1258	860x1950x75
	Visual (X-Y)		External (WxHxD)		
Product	677x977		834x1920x460		
10.160	Graphic Size: 700x1000mm				

ALMENDRALEJO 2-SIDED

* W: Width H: Height D: Depth *mm

	QTY	N.W	G.W	C.B.M	Size (WxHxD)
Packing	1	10.3kg	13.5kg	0.1258	860x1950x75
	Visual (X-Y)		External (WxHxD)		
Product	677x977		834x1920x460		
10.759	Graphic Size: 700x1000mm				

IBAHERNANDO

suitable for outdoor use

MADE IN EUROPE

32mm

double sided

revolving board

INFORMATION

This double-sided board is made of aluminum so it is lightweight and resistant thanks its strong feet. It has a 32mm width profile with click system, so the graphic change is quick and simple. Features a revolving board and it includes a resistant antireflection sheet so is also non-glare which allows it to be read under bright lights. Ideal for using outside your restaurant, street stall or supermarket for advertising offers, promotions or sales.

IBAHERNANDO * W: Width H: Height D: Depth *mm

	QTY	N.W	G.W	C.B.M	Size (WxHxD)
Packing	1	9.6kg	11.8kg	0.141	875x1535x105
	Visual (X-Y)		External (WxHxD)		
Product	686x986		821x1506x847		
10.165	Graphic Size: 700x1000mm				

* W: Width H: Height D: Depth * mm

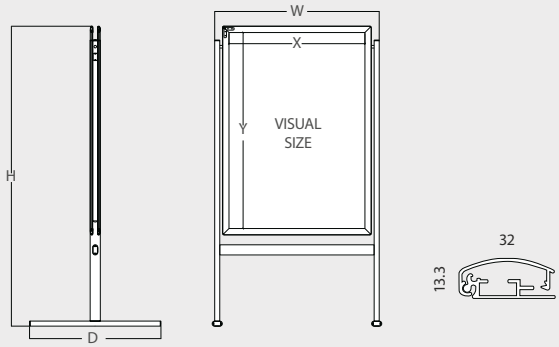

BOAL

double sided

suitable for outdoor use

INFORMATION * W: Width H: Height D: Depth * mm

The double-sided board frame of Boal is made of aluminum and has a strong base and sturdy springboard design, allowing flexion in windy conditions. It has a 34mm width profile with click system, so the graphic change is quick and simple. Features a 2-sided board frame and it includes a resistant antireflection sheet so is also non-glare which allows it to be read under bright lights. Bad weather deters foot traffic for most venues, but these sidewalk signs will give you the advantage of letting passersby know you're open-regardless of the weather conditions. Ideal for displaying outside your event, restaurant, street stall or supermarket for advertising offers or temporary exhibitions.

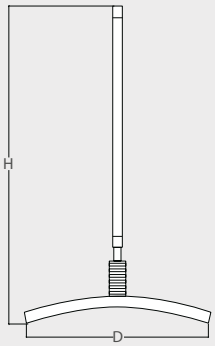

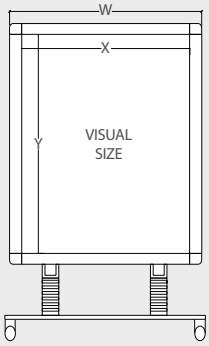

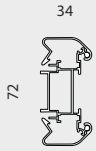

BOAL * W: Width H: Height D: Depth *mm

	QTY	N.W	G.W	C.B.M	Size (WxHxD)
Packing	1	7.8kg	9.4kg	0.066	750x1100x80
	1	4.55kg	4.85kg	0.009	140x670x100
	Visual (X-Y)		External (WxHxD)		
Product	570x815		640x1130x560		
10.166		Graphic Size: 605x860mm			

x2

suitable for outdoor use

RESIST

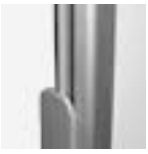

MADE IN EUROPE

HERVAS

double sided

suitable for outdoor use

INFORMATION * W: Width H: Height D: Depth * mm

The double-sided board Hervas is made of aluminum and has a strong base with a wide footprint and sturdy springboard design, allowing flexion in windy conditions. It has a 42mm width profile with click system, so the graphic change is quick and simple. Features a 2-sided board frame and it includes a resistant antireflection sheet so is also non-glare which allows it to be read under bright lights. Bad weather deters foot traffic for most venues, but these sidewalk signs will give you the advantage of letting passersby know you're open-regardless of the weather conditions. Ideal for using outside your gas station, restaurant, street stall or supermarket for advertising offers or temporary promotions.

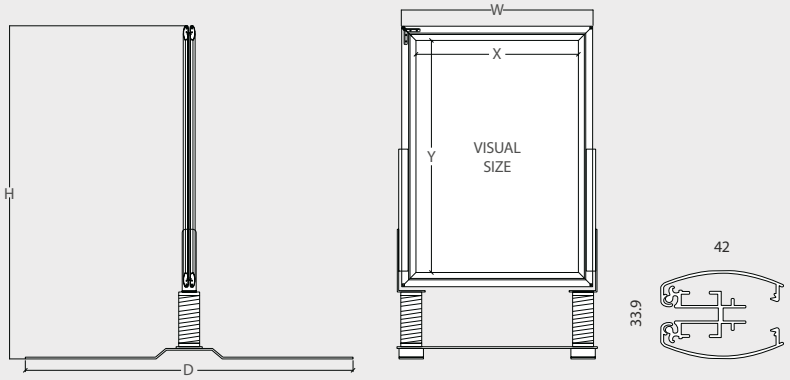

HERVAS H700 * W: Width H: Height D: Depth *mm

	QTY	N.W	G.W	C.B.M	Size (WxHxD)
Packing	1	4.2kg	5.05kg	0.0373	965x595x65
	1	9.35kg	9.5kg	0.0043	1010x77x55
	Visual (X-Y)		External (WxHxD)		
Product	466x666		575x956x940		

x2

10.161 Graphic Size: 500x700mm

HERVAS H1000 * W: Width H: Height D: Depth *mm

	QTY	N.W	G.W	C.B.M	Size (WxHxD)
Packing	1	6.75kg	8.45kg	0.0574	785x1125x65
	1	9.35kg	9.5kg	0.0043	1010x77x55
	Visual (X-Y)		External (WxHxD)		
Product	666x966		750x1256x940		

x2

10.162 Graphic Size: 700x1000mm

ARCACHON

42mm

24 L
Capacity
Ref. 10.341
Ref. 10.115

double sided

52 L
Capacity
Ref. 10.342
Ref. 10.116

INFORMATION

*mm

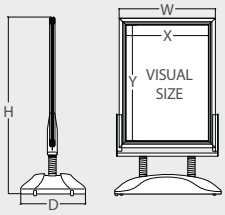

The Arcachon Board is a great way to draw attention from the street. This Click Board is designed especially for outdoor use, it is made from durable materials for a stable and long-lasting construction. The heavy-duty, molded plastic base features a screw-in cap and can be filled with 24l of water for 10.341 and 10.115 models and 52l for 10.116 and 10.342. Also it has a 42mm width waterproof profile with click system, so the graphic change is quick and simple. It includes a weather resistant antireflection sheet so is also non-glare which allows it to be read under bright lights. Built-in wheels also make this board easy to move as needed. To further enhance its stability Arcachon features rugged springs to reduce the impact of wind. With all these characteristics this waterproof Click Board is ideal for displaying outside your restaurant, street stall, event or supermarket for advertising offers or any temporary exhibition.

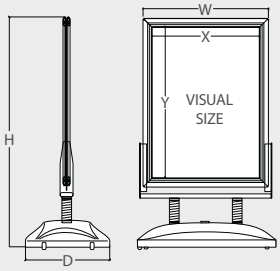

ARCACHON H500 * W: Width H: Height D: Depth *mm

	QTY	N.W	G.W	C.B.M	Size (WxHxD)
Packing	1 Frame	6.75kg	8.1kg	0.0475	660x900x80
	1 Base	3.7kg	4.4kg	0.068	800x170x500
	Visual (X-Y)		External (WxHxD)		
Product	478x678		542x1038x510		
10.115	Graphic Size: 500x700mm				

x2 — 24L — 32.39 — 42

ARCACHON H700 * W: Width H: Height D: Depth *mm

	QTY	N.W	G.W	C.B.M	Size (WxHxD)
Packing	1 Frame	9.1kg	10.5kg	0.0745	810x1150x80
	1 Base	5.75kg	6.5kg	0.1085	970x610x180
	Visual (X-Y)		External (WxHxD)		
Product	678x978		742x1382x510		
10.116	Graphic Size: 700x1000mm				

x2 — 52L — 32.39 — 42

ARCACHON A1 * W: Width H: Height D: Depth *mm

	QTY	N.W	G.W	C.B.M	Size (WxHxD)
Packing	1 Frame	8.1kg	9.2kg	0.0616	740x1040x90
	1 Base	3.7kg	4.4kg	0.068	800x170x500
	Visual (X-Y)		External (WxHxD)		
Product	572x819		636x1382x510		
10.341	Graphic Size: A1				

x2 — 24L — 32.39 — 42

ARCACHON A0 * W: Width H: Height D: Depth *mm

	QTY	N.W	G.W	C.B.M	Size (WxHxD)
Packing	1 Frame	10.25kg	11.60kg	0.1051	980x1340x80
	1 Base	5.75kg	6.5kg	0.1085	970x610x180
	Visual (X-Y)		External (WxHxD)		
Product	833x1182		920x1510x510		
10.342	Graphic Size: A0				

x2 — 52L — 32.39 — 42

MIKONOS

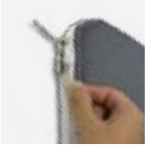

TEXTILE

double sided

double sided

17 L **Capacity** Ref. 15.243

TEXTILE *Printing on fabric. Impression sur toile. Impresão em tecido. Impresión en tela.

17 L **Capacity** Ref. 15.242

EXTERNAL SIZES & DOWNLOADABLES ARTWORKS (QR CODE) *mm

15.243

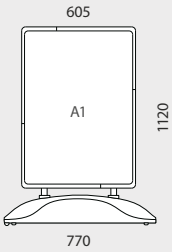

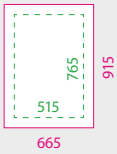

SAFE ZONE
TOTAL GRAPHIC

Mikonos features a lightweight aluminum structure with a refillable plastic base that assembles in seconds (It is 3.95kg weight and it can be filled with 17l of water). Also, the Textile Boards are also simple to setup. All the aluminium poles fit together and snap into base. Simply stretch the wrap over the completed base and it's ready to use. The aluminium structure is affixed to the base with 2 large springs, so it stays stable in windy conditions. Built-in wheels also make this board easy to move as needed. Carrying bag is included for an easy storage and transportation. Denote your business with the innovative design and versatility of textile printing. Ideal for trade shows or promotional events. The Mikonos outdoor board is ideal for being used at heavily-trafficked areas such as tradeshows, events, stores or malls.

15.242

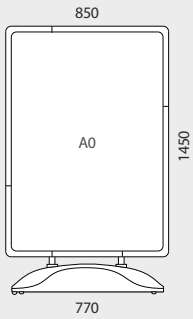

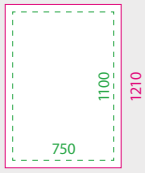

SAFE ZONE
TOTAL GRAPHIC

* Custom textil printing in full color is available but not included.

MIKONOS A1 * W: Width H: Height D: Depth *mm

	QTY	N.W	G.W	C.B.M	Size (WxHxD)	
Packing	1	7.5kg	9.5kg	0.11	520x940x230	17 L
15.243	Graphic Size:665x915mm					

MIKONOS A0 * W: Width H: Height D: Depth *mm

	QTY	N.W	G.W	C.B.M	Size (WxHxD)	
Packing	1	8kg	10kg	0.11	520x940x230	17 L
15.242	Graphic Size:860x1210mm					

CLICK DISPLAYS

EN	Click Frame Display with one or more frames. Aluminium profiles. Single or double-sided. For Indoor or outdoor use.
FR	Profilés en aluminium, permettant l'affichage d'un ou plusieurs cadres. Simple/double face. utilisation intérieure ou extérieure.
PT	Expositores com um ou mais marcos. Disponível em uma face ou em dupla face. Perfis de alumínio. Pode ser usado no interior ou exterior.
ES	Columna gráfica con uno o más marcos. Perfiles de aluminio. Disponible a una o dos caras. Apto para exterior o interior.

MADE IN EUROPE

GUADALUPE A4

INFORMATION * W: Width H: Height D: Depth * mm

Sign displays can be used in a variety of indoor locations to showcase eye-catching graphics and signage. These sign displays are equipped with click frames which let you display horizontal and vertical A4 graphics. If you choose the configuration of single-sided, you can display 4xA4-sized graphics. Also you can create a double-sided presentation by attaching your sign holders back to back and exposing 8xA4-sized graphics. Guadalupe features a 8kg weight base made of steel. These sign displays are made of aluminum and feature a smooth silver finish.

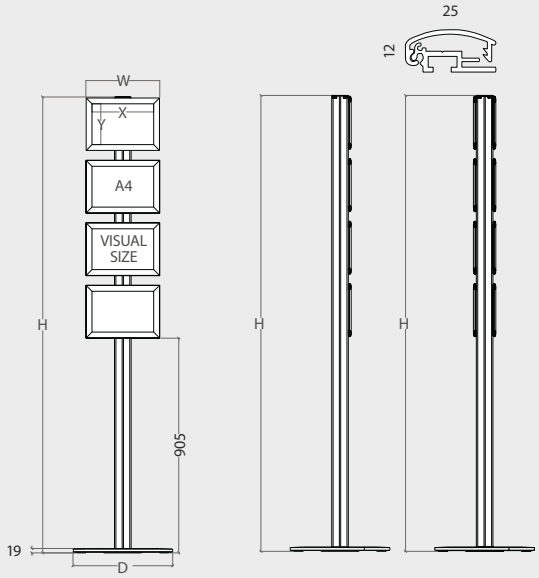

GUADALUPE A4 SINGLE * W: Width H: Height D: Depth *mm

	QTY	N.W	G.W	C.B.M	Size (WxHxD)
Packing	1	2.8kg	3.6kg	0.0123	80x1920x80
	1	8.2kg	8.5kg	0.0097	440x440x50
	4	0.45kg	0.55kg	0.0024	270x350x25
	Visual (X-Y)		External (WxHxD)		
Product	190x278		311x1922x Ø420		

x6

10.154 Graphic Size: A4 x 4uni.

GUADALUPE A4 DOUBLE * W: Width H: Height D: Depth *mm

	QTY	N.W	G.W	C.B.M	Size (WxHxD)
Packing	1	2.8kg	3.6kg	0.0123	80x1920x80
	1	8.2kg	8.5kg	0.0097	440x440x50
	8	0.45kg	0.55kg	0.0024	270x350x25
	Visual (X-Y)		External (WxHxD)		
Product	190x278		311x1922x Ø420		

x10

10.156 Graphic Size: A4 x 8uni.

GUADALUPE A3

MADE IN EUROPE

INFORMATION

* W: Width H: Height D: Depth * mm

Sign displays can be used in a variety of indoor locations to showcase eye-catching graphics and signage. These sign displays are equipped with click frames which let you display horizontal and vertical A3 graphics. If you choose the configuration of single-sided, you can display 3xA3-sized graphics. Also you can create a double-sided presentation by attaching your sign holders back to back and exposing 6xA3-sized graphics. Guadalupe features a 8kg weigth base are made of steel. These sign displays are made of aluminum and feature a smooth silver finish.

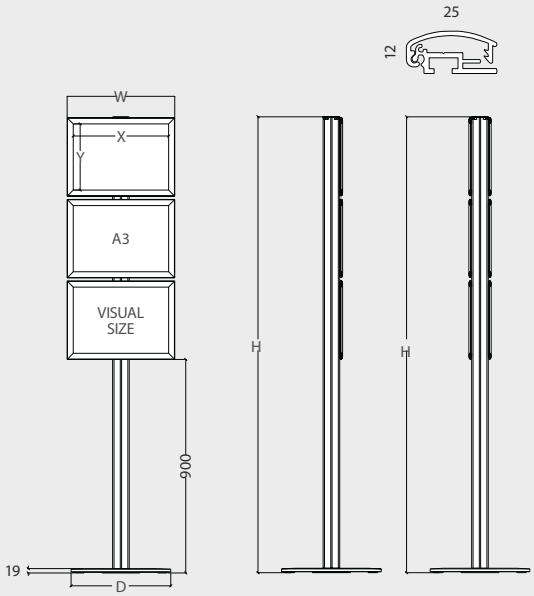

quick and simple graphic change

size A3: 3 or 6 frames

aluminium profile

single or double sided

steel base 8 kg

GUADALUPE A3 SINGLE

* W: Width H: Height D: Depth *mm

	QTY	N.W	G.W	C.B.M	Size (WxHxD)
Packing	1	2.8kg	3.6kg	0.0123	80x1920x80
	1	8.2kg	8.5kg	0.0097	440x440x50
	3	0.65kg	0.85kg	0.0061	365x480x35
	Visual (X-Y)		External (WxHxD)		
Product	278x401		453x1922x Ø420		

x5

10.155 Graphic Size: A3 x 3uni.

GUADALUPE A3 DOUBLE

* W: Width H: Height D: Depth *mm

	QTY	N.W	G.W	C.B.M	Size (WxHxD)
Packing	1	2.8kg	3.6kg	0.0123	80x1920x80
	1	8.2kg	8.5kg	0.0097	440x440x50
	6	0.65kg	0.85kg	0.0061	365x480x35
	Visual (X-Y)		External (WxHxD)		
Product	278x401		453x1922x Ø420		

x8

10.157 Graphic Size: A3 x 6uni.

MADE IN EUROPE

PLASENCIA

INFORMATION

* W: Width H: Height D: Depth * mm

Sign displays can be used in a variety of indoor locations to showcase eye-catching graphics and signage. These sign displays are equipped with click frames. Simply flip open the frames' molding and slide your graphics behind the non-glare lenses. These sign displays are made of aluminum and feature a smooth silver finish. Also double-sided presentation is available.

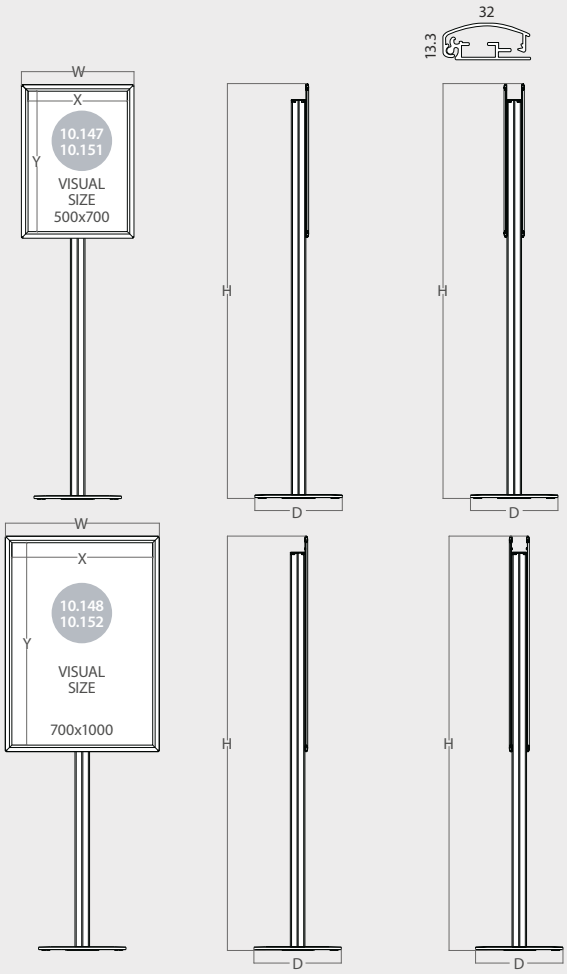

PLASENCIA H700

* W: Width H: Height D: Depth *mm

	QTY	N.W	G.W	C.B.M	Size (WxHxD)
Packing	1	2.8kg	3.6kg	0.0123	80x1920x80
	1	8.2kg	8.5kg	0.0097	440x440x50
	1	1.5kg	2kg	0.0104	560x745x25
	Visual (X-Y)		External (WxHxD)		
Product	478x678		540x1922x Ø420		

x3

10.147 Graphic Size: 500x700 x 1uni.

PLASENCIA H700 DOUBLE

* W: Width H: Height D: Depth *mm

	QTY	N.W	G.W	C.B.M	Size (WxHxD)
Packing	1	2.8kg	3.6kg	0.0123	80x1920x80
	1	8.2kg	8.5kg	0.0097	440x440x50
	2	1.5kg	2kg	0.0104	560x745x25
	Visual (X-Y)		External (WxHxD)		
Product	478x678		540x1922x Ø420		

x4

10.151 Graphic Size: 500x700 x 2uni.

PLASENCIA H1000

* W: Width H: Height D: Depth *mm

	QTY	N.W	G.W	C.B.M	Size (WxHxD)
Packing	1	2.8kg	3.6kg	0.0123	80x1920x80
	1	8.2kg	8.5kg	0.0097	440x440x50
	1	2.55kg	3.25kg	0.0123	80x1920x80
	Visual (X-Y)		External (WxHxD)		
Product	678x978		740x1922x Ø420		

x3

10.148 Graphic Size: 700x1000 x 1uni.

PLASENCIA H1000 DOUBLE

* W: Width H: Height D: Depth *mm

	QTY	N.W	G.W	C.B.M	Size (WxHxD)
Packing	1	2.8kg	3.6kg	0.0123	80x1920x80
	1	8.2kg	8.5kg	0.0097	440x440x50
	2	2.55kg	3.25kg	0.0123	80x1920x80
	Visual (X-Y)		External (WxHxD)		
Product	678x978		740x1922x Ø420		

x4

10.152 Graphic Size: 700x1000 x 2uni.

MADE IN EUROPE

LEINSTER

INFORMATION * W: Width H: Height D: Depth * mm

The Leinster double-sided display is built from sturdy, durable aluminum frame. With an easy-to-use snap frame and edge-lit LED bulbs, Lainster lightbox stand is useful for darker venues, such as halls and movie theaters. The convex holder helps graphics pop out, ensuring that the double sided poster display can be seen from any angle. Designed for day or night time use, the illuminated lightbox stand has clear PVC lens to prevent glare, while the LED bulbs highlight signage.

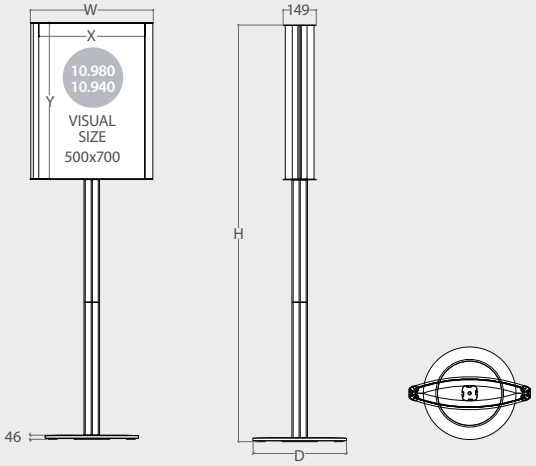

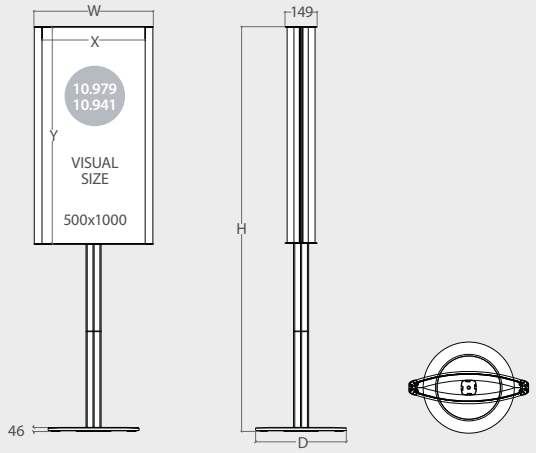

LED

available with or without LED

highly resistant!

single or double sided

steel base 8 kg

LEINSTER H700

* W: Width H: Height D: Depth *mm

	QTY	N.W	G.W	C.B.M	Size (WxHxD)
Packing	1	18.75kg	21.3kg	0.1202	1095x610x180
	1	8.2kg	8.5kg	0.009	440x440x50
	Visual (X-Y)		External (WxHxD)		
Product	476x700		552x1868x Ø420		

x2

10.980 — Graphic Size: 500x700

LEINSTER H700 LED

* W: Width H: Height D: Depth *mm

	QTY	N.W	G.W	C.B.M	Size (WxHxD)
Packing	1	18.75kg	21.3kg	0.1202	1095x610x180
	1	8.2kg	8.5kg	0.009	440x440x50
	Visual (X-Y)		External (WxHxD)		
Product	476x700		552x1868x Ø420		

x2 LED

10.940 — Graphic Size: 500x700

LEINSTER H1000

* W: Width H: Height D: Depth *mm

	QTY	N.W	G.W	C.B.M	Size (WxHxD)
Packing	1	18.75kg	21.3kg	0.1202	1095x610x180
	1	8.20kg	8.5kg	0.009	440x440x50
	Visual (X-Y)		External (WxHxD)		
Product	476x1000		552x1868x Ø420		

x2

10.979 — Graphic Size: 500x1000

LEINSTER H1000 LED

* W: Width H: Height D: Depth *mm

	QTY	N.W	G.W	C.B.M	Size (WxHxD)
Packing	1	18.75kg	21.3kg	0.1202	1095x610x180
	1	8.20kg	8.5kg	0.009	440x440x50
	Visual (X-Y)		External (WxHxD)		
Product	476x1000		552x1868x Ø420		

x2 LED

10.941 — Graphic Size: 500x1000

LIGHT BOXES

EN	LED light box. Using “click” profile system and anodized aluminium. AC power supply and anti-reflex cover included.
FR	Cadre lumineux à LED. Système click. Profil en aluminium anodisé. Alimentation AC et protection antireflet inclus.
PT	Marco luminoso Led. Perfil com sistema “click” em alumínio anodizado. Transformador e película antirreflexo incluídos.
ES	Marcos luminosos a pared con sistema de apertura “click”. Fabricado en aluminio. Incluye anti-reflex y alimentación eléctrica.

MADE IN EUROPE

YUCATAN

LED

INFORMATION * W: Width H: Height D: Depth * mm

This window hanging light box for daily use combines the power of LED illumination technology with the elegance of a thin profile. The frame on each model is 17.8mm thick, making it one of the slimmest marketing devices currently available. Small LED bulbs in the sides of the window hanging light box frame prevents against "hot" and "cold" spots appearing on the graphics. The diffusion pattern within the lightbox makes sure that the beams shed evenly over the images. Users can also adorn this LED signage to the wall. The thin window hanging light box showcases posters and graphics in either landscape or portrait orientation.

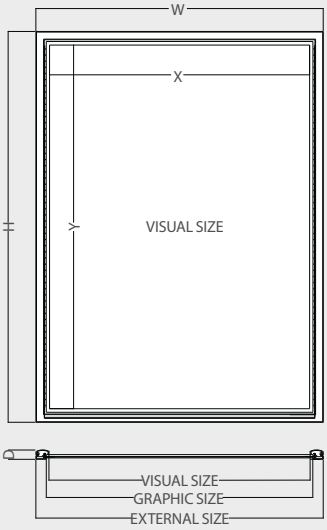

other sizes available upon request

YUCATAN * W: Width H: Height D: Depth *mm

Ref.	Graphic Size	Visual (X-Y)	External (WxHxD)	Profile	Packing (QTY)	N.W	G.W	C.B.M	Size (WxHxD)
13.207	A0	828x1176	880x1228x17.8	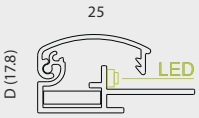	1	7.25kg	10.1kg	0.0737	910x1350x60
13.208	A1	581x828	633x880x17.8		1	3.95kg	5.5kg	0.0398	660x1005x60
13.209	A2	407x581	459x633x17.8		1	2.1kg	3.1kg	0.0222	490x755x60
13.210	A3	284x407	336x459x17.8		1	1.3kg	1.95kg	0.0128	365x585x60
13.211	A4	197x284	249x336x17.8		1	0.8kg	1.2kg	0.0077	280x460x60
13.295	500x700	487x686	539x738x17.8		1	2.85kg	4.1kg	0.0296	570x865x60
13.296	700x1000	687x987	739x1039x17.8		1	5.3kg	7.3kg	0.0538	770x1165x60

* Other sizes available upon request / Autres dimension sur demande / Outros tamanhos disponíveis sob consulta / Otros tamaños disponibles bajo pedido.

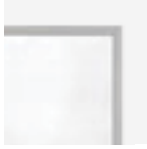

MADE IN EUROPE

ARTEGA

LED

32mm profile thickness

INFORMATION * W: Width H: Height D: Depth * mm

Artega hanging light box for daily use combines the power of LED illumination technology with silver finsh of aluminium. Small LED bulbs in the sides of the 19.75mm thickness frame frame prevents against "hot" and "cold" spots appearing on the graphics. The diffusion pattern within the lightbox makes sure that the beams shed evenly over the images. Users can also adorn this LED signage to the wall. The Artega hanging light box showcases posters and graphics in either landscape or portrait orientation.

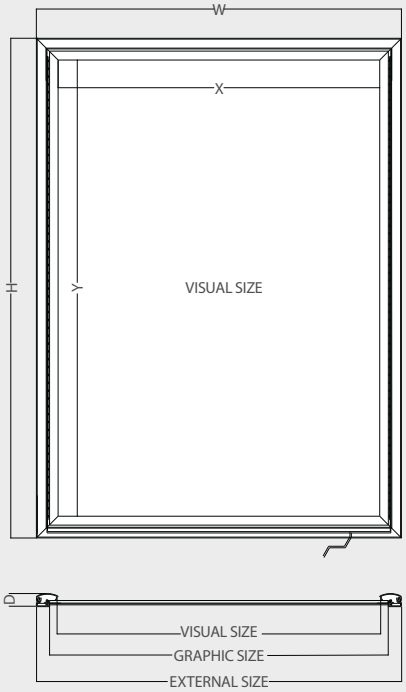

silver anodized aluminium finish

AC power supply included

ARTEGA * W: Width H: Height D: Depth *mm

Ref.	Graphic Size	Visual (X-Y)	External (WxHxD)	Profile	Packing (QTY)	N.W	G.W	C.B.M	Size (WxHxD)
13.202	A0	815x1163	880x1228x19.75	32 / D (19.75) / LED	1	7.25kg	10.1kg	0.0737	910x1350x60
13.203	A1	568x815	633x880x19.75		1	3.95kg	5.5kg	0.0398	660x1005x60
13.204	A2	394x568	459x633x19.75		1	2.1kg	3.1kg	0.0222	490x755x60
13.205	A3	271x394	336x459x19.75		1	1.3kg	1.95kg	0.0128	365x585x60
13.206	A4	184x271	249x336x19.75		1	0.8kg	1.2kg	0.0077	280x460x60
13.293	500x700	474x673	539x738x19.75		1	2.85kg	4.1kg	0.0296	570x865x60
13.294	700x1000	674x974	739x1039x19.75		1	5.3kg	7.3kg	0.0538	770x1165x60

* Other sizes available upon request / Autres dimension sur demande / Outros tamanhos disponíveis sob consulta / Otros tamaños disponibles bajo pedido.

MADE IN EUROPE

CAMPECHE

LED

"click" profile system

INFORMATION * W: Width H: Height D: Depth * mm

The Campeche frame display is built from sturdy, durable aluminum frame. With an easy-to-use snap frame and edge-lit LED bulbs, Campeche lightbox stand is useful for darker venues, such as halls and movie theaters. The convex holder helps graphics pop out, ensuring that the double sided poster display can be seen from any angle. Designed for day or night time use, the illuminated lightbox stand has clear PVC lens to prevent glare, while the LED bulbs highlight signage.

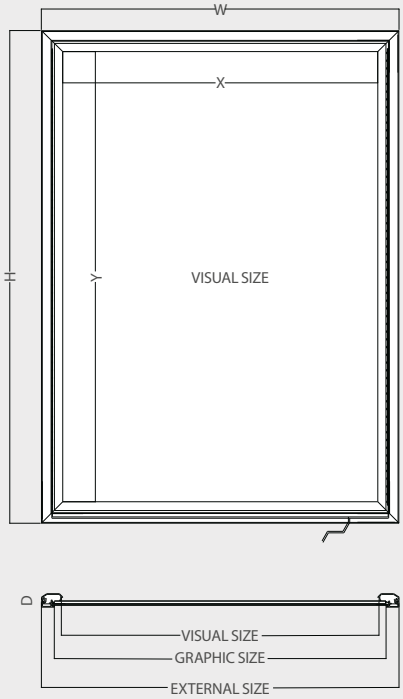

32mm profile thickness

other sizes available upon request

CAMPECHE * W: Width H: Height D: Depth *mm

Ref.	Graphic Size	Visual (X-Y)	External (WxHxD)	Profile	Packing (QTY)	N.W	G.W	C.B.M	Size (WxHxD)	
13.217	A0	815x1163	880x1228x20.15	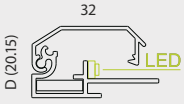	1	7.25kg	10.1kg	0.0737	910x1350x60	
13.218	A1	568x815	633x880x20.15		1	3.95kg	5.5kg	0.0398	660x1005x60	
13.219	A2	394x568	459x633x20.15		1	2.1kg	3.1kg	0.0222	490x755x60	
13.220	A3	271x394	336x459x20.15		1	1.3kg	1.95kg	0.0128	365x585x60	
13.221	A4	184x271	249x336x20.15		1	0.8kg	1.2kg	0.0077	280x460x60	
13.291	500x700	474x673	539x738x20.15		1	2.85kg	4.1kg	0.0296	570x865x60	
13.292	700x1000	674x974	739x1039x20.15		1	5.3kg	7.3kg	0.0538	770x1165x60	

* Other sizes available upon request / Autres dimension sur demande / Outros tamanhos disponíveis sob consulta / Otros tamaños disponibles bajo pedido.

MADE IN EUROPE

NOGALES

LED

INFORMATION

* W: Width H: Height D: Depth * mm

The Nogales double-sided frame is built from sturdy, durable aluminum frame. With an easy-to-use snap frame and edge-lit LED bulbs, Lainster lightbox stand is useful for darker venues, such as halls and movie theaters. The vertical holder tubes, ensuring that the double sided poster display can be seen from any angle. Designed for day or night time use, the illuminated lightbox stand has clear PVC lens to prevent glare, while the LED bulbs highlight signage.

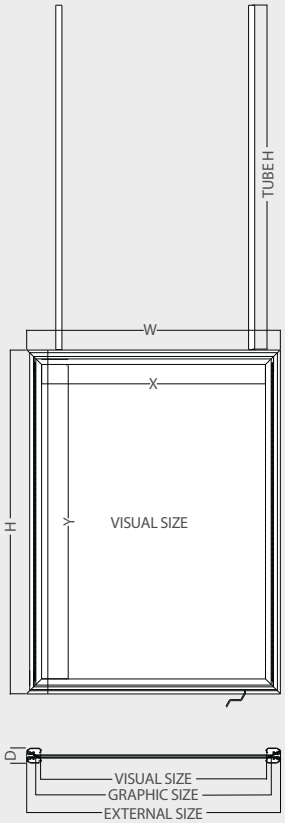

NOGALES

* W: Width H: Height D: Depth *mm

Ref.	Graphic Size	Visual (X-Y)	External (WxHxD)	Tube H	Profile	Packing (QTY)	N.W	G.W	C.B.M	Size (WxHxD)	LED
13.190	A0	815x1163	880x1228x32.2	1228	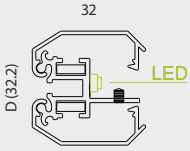	1	10.8kg	13.4kg	0.1050	964x1379x79	
13.191	A1	568x815	633x880x32.2	880		1	6.05kg	7.85kg	0.0584	717x1031x79	
13.192	A2	394x568	459x633x32.2	633		1	3.5kg	4.6kg	0.0336	543x784x79	
13.193	A3	271x394	336x459x32.2	459		1	2.15kg	2.85kg	0.0140	420x610x79	
13.194	A4	184x271	249x336x32.2	336		1	1.35kg	1.9kg	0.0128	333x487x79	
13.289	500x700	474x673	539x738x32.2	738		1	4.55kg	5.85kg	0.0438	623x890x79	
13.290	700x1000	674x974	739x1039x32.2	1039		1	7.95kg	9.95kg	0.0727	790x1165x79	

* Other sizes available upon request / Autres dimension sur demande / Outros tamanhos disponíveis sob consulta / Otros tamaños disponibles bajo pedido.

SINTRA

EN Available with and without light.

FR Disponible avec ou sans éclairage.

PT Disponível com ou sem iluminação.

ES Disponible con y sin iluminación.

LED available with/without LED light

INFORMATION

* W: Width H: Height D: Depth * mm

The Sintra double-sided sign stand is built from sturdy, durable silver anodized aluminum. With an easy-to-use Click frame (edge-lit LED optional). This mobile frame features 4 rolling brake wheels, so it is very simple and comfortable to move. Designed for day or nighttime use, the illuminated lightbox stand has clear PVC lens to prevent glare. Sintra is the ideal display frame for advertising in retail locations, restaurants, clinics, academies or exhibitions, also if you choose the optional LED Light, Sintra double-sided lightbox stand is useful for darker halls or for movie theaters.

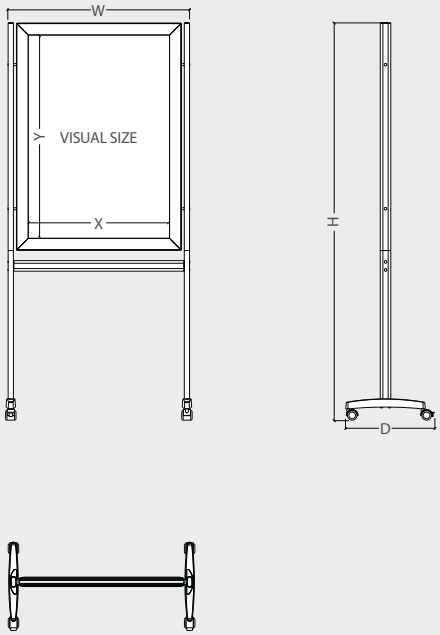

MADE IN EUROPE

SINTRA

* W: Width H: Height D: Depth *mm

	QTY	N.W	G.W	C.B.M	Size (WxHxD)
Packing	1	16.5kg	19.95kg	0.01455	920x140x1130
	Visual (X-Y)		External (WxHxD)		
Product	683x983		900x1925x430		
10.313	Graphic Size: 700x1000mm				

SINTRA LED LIGHT

* W: Width H: Height D: Depth *mm

	QTY	N.W	G.W	C.B.M	Size (WxHxD)
Packing	1	20.35kg	22.7kg	0.01455	920x140x1130
	Visual (X-Y)		External (WxHxD)		
Product	683x983		900x1925x430		
10.767	Graphic Size: 700x1000mm				

GENOVA
LIGHT WALL TOTEM

EN	Light box frame for graphics. With anti-reflex and steel base. Available in different sizes.
FR	Totem lumineux avec antireflet. Base en acier. Disponible en plusieurs tailles.
PT	Totém luminoso com pelicula protetora e base em aço. Disponível em vários tamanhos.
ES	Tótem luminoso con anti-reflex y base en acero. Disponible en diferentes medidas.

INFORMATION * W: Width H: Height D: Depth * mm

The Genova light wall poster holder totem consists of a high quality anodized aluminum poster frame along with an accompanying satin metal base. With an easy-to-use snap frame, this system allows an easy and quick poster change. The poster holder display, which is a curved sign holder also features backlit LED illumination. Designed for day or night time use, the illuminated lightbox stand has clear PVC lens to prevent glare. Genova is ideal for using at hospitals, clinics, academies or exhibitions, also thanks its LED Light, Genova lightbox stand is useful for darker halls or movie theaters.

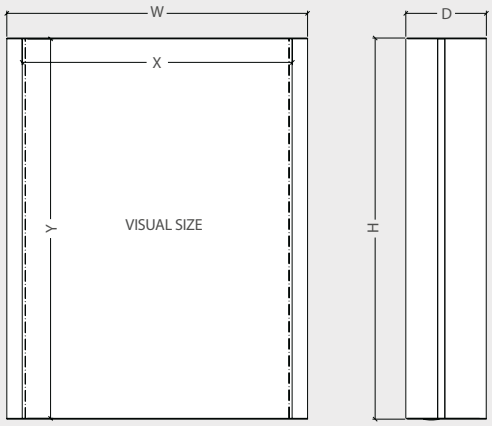

silver anodized aluminium

32mm

fast change of graphic

MADE IN EUROPE

GENOVA 700 LED * W: Width H: Height D: Depth *mm

	QTY	N.W	G.W	C.B.M	Size (WxHxD)
Packing	1	9.4kg	10.9kg	0.0918	600x765x200
	Visual (X-Y)		External (WxHxD)		
Product	518x707		710x560x150		
10.117	Visual: 500x700mm		Graphic Size: 539x707mm		

GENOVA 1000 LED * W: Width H: Height D: Depth *mm

	QTY	N.W	G.W	C.B.M	Size (WxHxD)
Packing	1	15.05kg	17.45kg	0.1758	805x1065x205
	Visual (X-Y)		External (WxHxD)		
Product	712x10007		760x1010x150		
10.348	Visual: 700x1000mm		Graphic Size: 734x1007mm		

MADE IN EUROPE

OBIDOS

LED

INFORMATION

* W: Width H: Height D: Depth * mm

The Obidos double-sided Totem is built from sturdy, durable silver anodized aluminum with a steel base. Designed for day or night time use, the illuminated lightbox stand has clear PVC lens to prevent glare. Also known as a Light Totem, Obidos is freestanding and is very well suited as display frame for advertising in restaurants, clinics, academies or exhibitions, also thanks its LED Light, it's useful for darker halls or movie theaters. With its unique convex display and bright illumination, Obidos is sure to attract the attention of your target audience.

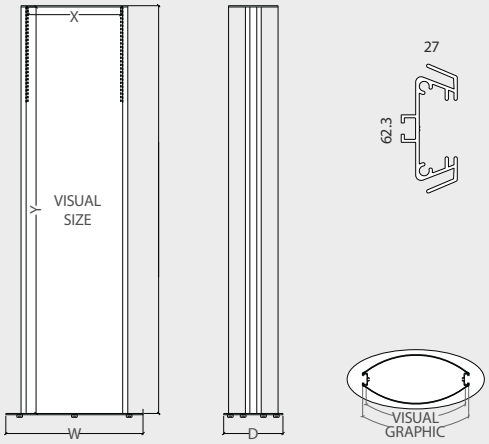

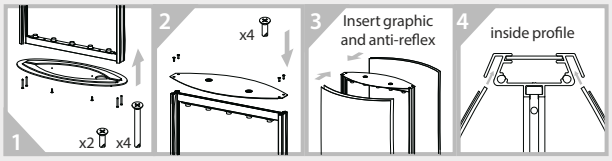

double sided

anti-reflective plastic included

OBIDOS H1600

* W: Width H: Height D: Depth *mm

	QTY	N.W	G.W	C.B.M	Size (WxHxD)
Packing	1	9.46kg	11.70kg	0.1078	570x1645x115
	1	5.30kg	5.65kg	0.0054	565x275x35
	Visual (X-Y)		External (WxHxD)		
Product	488x1600		540x1610x234		

x2

10.221 Totem: 500x1600mm Graphic Size: 516x1600mm

OBIDOS H1800

* W: Width H: Height D: Depth *mm

	QTY	N.W	G.W	C.B.M	Size (WxHxD)
Packing	1	13.20kg	16.10kg	0.14	660x1845x115
	1	6.05kg	6.45kg	0.0072	665x310x35
	Visual (X-Y)		External (WxHxD)		
Product	602x1800		640x1810x277		

x2

10.222 Totem: 600x1800mm Graphic Size: 630x1800mm

OBIDOS H2000

* W: Width H: Height D: Depth *mm

	QTY	N.W	G.W	C.B.M	Size (WxHxD)
Packing	1	16kg	19.40kg	0.1764	750x2045x115
	1	10kg	10.50kg	0.0095	765x355x35
	Visual (X-Y)		External (WxHxD)		
Product	703x2000		740x2010x320		

x2

10.223 Totem: 700x2000mm Graphic Size: 731x2000mm

MADE IN EUROPE

CASCAIS

anti-reflective plastic included

EN	Available with and without light.
FR	Disponible avec ou sans éclairage.
PT	Disponível com ou sem iluminação.
ES	Disponible con y sin iluminación.

LED

INFORMATION

* W: Width H: Height D: Depth * mm

The Cascais double-sided Totem is built from sturdy, durable silver anodized aluminum with steel base. Designed for day or night time use, the illuminated lightbox stand has clear PVC lens to prevent glare. This Totem is freestanding and is very well suited as display frame for advertising in retail locations, restaurants, clinics, academies or exhibitions, also if you choose the optional LED Light, Cascais lightbox stand is useful for darker halls or movie theaters.

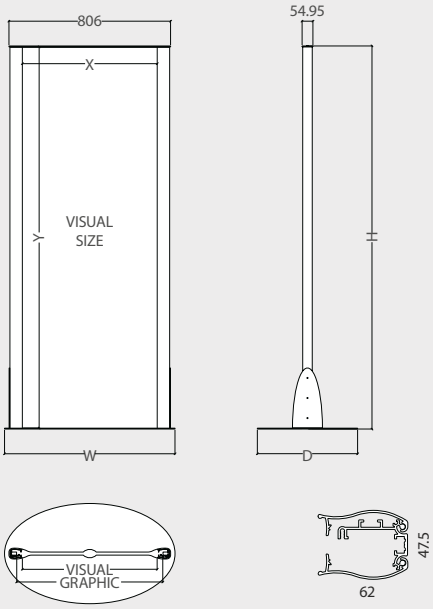

CASCAIS

* W: Width H: Height D: Depth *mm

	QTY	N.W	G.W	C.B.M	Size (WxHxD)
Packing	1	19.25kg	21.9kg	0.1579	850x1955x95
	1	14.85kg	15.75kg	0.0213	875x540x45
	Visual (X-Y)		External (WxHxD)		
Product	672x1900		850x1910x500		
10.356	Totem: 700x1900mm		Graphic Size: 728x1900mm		

x2

CASCAIS LED

* W: Width H: Height D: Depth *mm

	QTY	N.W	G.W	C.B.M	Size (WxHxD)
Packing	1	20.45kg	23.1kg	0.1579	850x1955x95
	1	14.85kg	15.75kg	0.0213	875x540x45
	Visual (X-Y)		External (WxHxD)		
Product	672x1900		850x1910x500		
10.354	Totem: 700x1900mm		Graphic Size: 728x1900mm		

x2

NANTES

EN	Available with and without light.
FR	Disponible avec ou sans éclairage.
PT	Disponível com ou sem iluminação.
ES	Disponible con y sin iluminación.

LED

anti-reflective plastic

MADE IN EUROPE

double sided

INFORMATION

* W: Width H: Height D: Depth * mm

The Nantes double-sided Totem is built from sturdy, durable silver anodized aluminum with steel base. Designed for day or night time use, the illuminated lightbox stand has clear PVC lens to prevent glare. Also known as a Light Totem, Nantes is freestanding and is very well suited as display frame for advertising in restaurants, clinics, academies or exhibitions, also thanks its LED Light, it's useful for darker halls or movie theaters. With its unique convex display and bright illumination, Nantes is sure to attract the attention of your target audience.

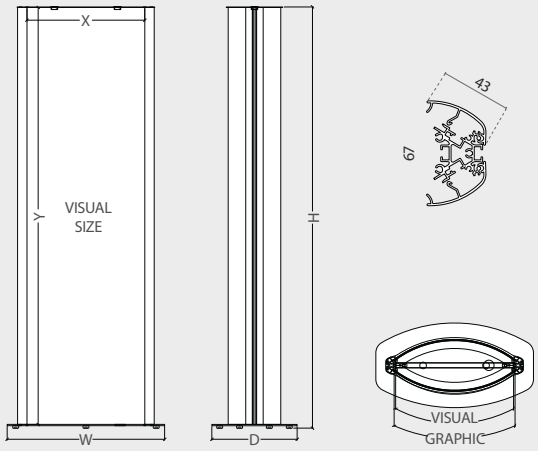

NANTES H1200

* W: Width H: Height D: Depth *mm

	QTY	N.W	G.W	C.B.M	Size (WxHxD)
Packing	1	8.25kg	10.1kg	0.0816	570x1245x115
	1	7.65kg	8.65kg	0.0077	620x355x35
	Visual (X-Y)		External (WxHxD)		
Product	485x1200		600x1217x325		

x2

10.602 Totem: 500x1200mm Graphic Size: 524x1200mm

NANTES H1200 LED

* W: Width H: Height D: Depth *mm

	QTY	N.W	G.W	C.B.M	Size (WxHxD)
Packing	1	9.35kg	11.2kg	0.0816	570x1245x115
	1	7.65kg	8.65kg	0.0077	620x355x35
	Visual (X-Y)		External (WxHxD)		
Product	485x1200		600x1217x325		

x2 LED

10.402 Totem: 500x1200mm Graphic Size: 524x1200mm

NANTES H1600

* W: Width H: Height D: Depth *mm

	QTY	N.W	G.W	C.B.M	Size (WxHxD)
Packing	1	9.5kg	11.45kg	0.1078	570x1645x115
	1	7.65kg	8.65kg	0.0077	620x355x35
	Visual (X-Y)		External (WxHxD)		
Product	485x1600		600x1617x325		

x2

10.436 Totem: 500x1600mm Graphic Size: 524x1600mm

NANTES H1600 LED

* W: Width H: Height D: Depth *mm

	QTY	N.W	G.W	C.B.M	Size (WxHxD)
Packing	1	10.5kg	12.45kg	0.1078	570x1645x115
	1	7.65kg	8.65kg	0.0077	620x355x35
	Visual (X-Y)		External (WxHxD)		
Product	485x1600		600x1617x325		

x2 LED

10.464 Totem: 500x1600mm Graphic Size: 524x1600mm

NANTES H1800

* W: Width H: Height D: Depth *mm

	QTY	N.W	G.W	C.B.M	Size (WxHxD)
Packing	1	14.6kg	17kg	0.14	660x1845x115
	1	9.95kg	11.05kg	0.0101	720x400x35
	Visual (X-Y)		External (WxHxD)		
Product	588x1800		700x1817x370		

x2

10.460 Totem: 600x1800mm Graphic Size: 626x1800mm

NANTES 1800 LED

* W: Width H: Height D: Depth *mm

	QTY	N.W	G.W	C.B.M	Size (WxHxD)
Packing	1	15.6kg	18kg	0.14	660x1845x115
	1	9.95kg	11.05kg	0.0101	720x400x35
	Visual (X-Y)		External (WxHxD)		
Product	588x1800		700x1817x370		

x2 LED

10.465 Totem: 600x1800mm Graphic Size: 626x1800mm

NANTES W700xH1800

* W: Width H: Height D: Depth *mm

	QTY	N.W	G.W	C.B.M	Size (WxHxD)
Packing	1	15.95kg	18.55kg	0.1570	740x1845x115
	1	13.4kg	14.55kg	0.0132	820x460x35
	Visual (X-Y)		External (WxHxD)		
Product	695x1800		800x1817x427		

x2

10.521 Totem: 700x1800mm Graphic Size: 724x1800mm

NANTES W700xH1800 LED

* W: Width H: Height D: Depth *mm

	QTY	N.W	G.W	C.B.M	Size (WxHxD)
Packing	1	16.95kg	19.55kg	0.1570	740x1845x115
	1	13.4kg	14.55kg	0.0132	820x460x35
	Visual (X-Y)		External (WxHxD)		
Product	695x1800		800x1817x427		

x2 LED

10.556 Totem: 700x1800mm Graphic Size: 724x1800mm

MADE IN EUROPE

ULSTER

INFORMATION * W: Width H: Height D: Depth * mm

This Ulster Menu Stand is made of aluminium and features an anti-reflex protection cover for its A3 frame. The Ulster frame borders snap open which allows to insert quickly and easily your printed graphics. Also, it features the option of customize with an inside graphic. It is ideal for hotel lobbies, for restaurant entrances, car dealerships or real states.

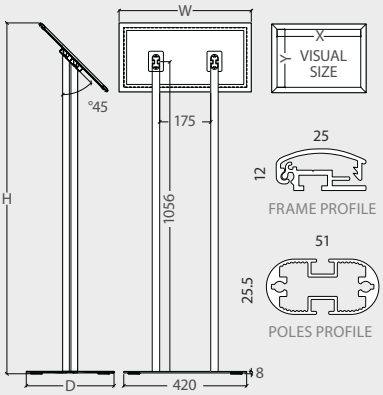

ULSTER * W: Width H: Height D: Depth *mm

	QTY	N.W	G.W	C.B.M	Size (WxHxD)
Packing	1	2.15kg	2.5kg	0.0102	145x1170x60
	1	5kg	5.3kg	0.0061	365x480x35
	1	0.65kg	0.85kg	0.0061	365x480x35
	Visual (X-Y)		External (WxHxD)		
Product	400x277		452x1200x300		

x3

10.982 Graphic Size: A3

ZAFRA

MADE IN EUROPE

INFORMATION * W: Width H: Height D: Depth * mm

This Menu Stand features a sturdy aluminium structure with plastic parts. Its Click System frame allows an easy and quick graphic change (anti-reflex cover included). Frames features portrait or a landscape configuration. It is ideal for retail stores, hotel lobbies, restaurant entrances, car dealerships and real states.

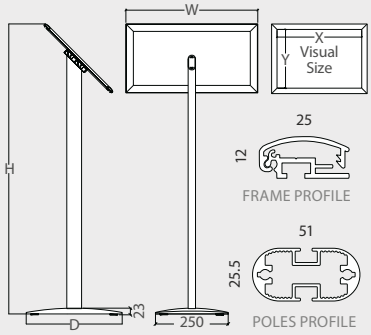

ZAFRA A3 * W: Width H: Height D: Depth *mm

	QTY	N.W	G.W	C.B.M	Size (WxHxD)
Packing	1	0.75kg	0.95kg	0.0047	60x930x85
	1	1.65kg	1.76kg	0.0034	275x355x35
	1	0.65kg	0.85kg	0.0061	365x480x35
	Visual (X-Y)		External (WxHxD)		
Product	400x277		453x998x330		

x3

10.159 Graphic Size: A3

ZAFRA A4 * W: Width H: Height D: Depth *mm

	QTY	N.W	G.W	C.B.M	Size (WxHxD)
Packing	1	0.75kg	0.95kg	0.0047	60x930x85
	1	1.65kg	1.76kg	0.0034	275x355x35
	1	0.45kg	0.55kg	0.0024	270x350x25
	Visual (X-Y)		External (WxHxD)		
Product	190x278		311x960x330		

x3

10.158 Graphic Size: A4

MELGAR
ONE-SIDED

INFORMATION * W: Width H: Height D: Depth * mm

This Menu Stand features a sturdy aluminium structure with plastic parts. Its Click System frame allows an easy and quick graphic change (anti-reflex cover included). Frames features portrait or a landscape configuration. Also Melgar is available with an A4 leaflet dispenser. It is ideal for retail stores, hotel lobbies, restaurant entrances, car dealerships and real states. Melgar is sure to attract the attention of your target audience.

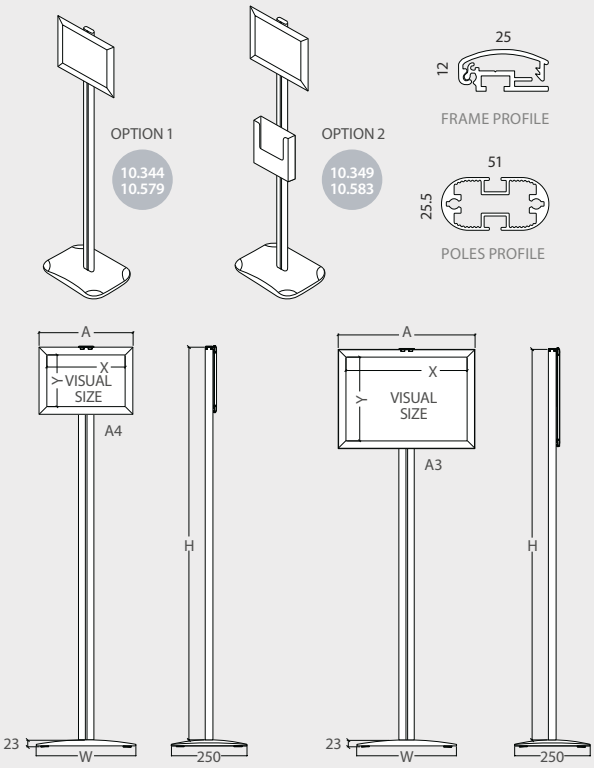

MELGAR A4 1SIDED * W: Width H: Height D: Depth *mm

	QTY	N.W	G.W	C.B.M	Size (WxHxD)
Packing	1	1.15kg	1.25kg	0.0035	65x1340x40
	1	2.8kg	2.93kg	0.0036	263x388x35
	1	0.82kg	0.91kg	0.0024	350x270x25
	Visual (X-Y)		External (WxHxA)		
Product	190x278		330x1326x311		

x3

10.344 Graphic Size: A4

MELGAR A4 1S+DISPENSER * W: Width H: Height D: Depth *mm

	QTY	N.W	G.W	C.B.M	Size (WxHxD)
Packing	1	1.15kg	1.25kg	0.0035	65x1340x40
	1	2.8kg	2.93kg	0.0036	263x388x35
	1	0.4kg	0.55kg	0.0029	235x250x50
	1	0.82kg	0.91kg	0.0024	350x270x25
	Visual (X-Y)		External (WxHxA)		
Product	190x278		330x1326x311		

x4

10.349 Graphic Size: A4 with A4 x1

MELGAR A3 1SIDED * W: Width H: Height D: Depth *mm

	QTY	N.W	G.W	C.B.M	Size (WxHxD)
Packing	1	1.15kg	1.25kg	0.0035	65x1340x40
	1	2.8kg	2.93kg	0.0032	263x388x35
	1	1.44kg	1.74kg	0.0042	475x355x25
	Visual (X-Y)		External (WxHxA)		
Product	278x401		330x1326x453		

x3

10.579 Graphic Size: A3

MELGAR A3 1S+DISPENSER * W: Width H: Height D: Depth *mm

	QTY	N.W	G.W	C.B.M	Size (WxHxD)
Packing	1	1.15kg	1.25kg	0.0035	65x1340x40
	1	2.8kg	2.93kg	0.0036	263x388x35
	1	0.4kg	0.55kg	0.0029	235x250x50
	1	1.44kg	1.74kg	0.0042	475x355x25
	Visual (X-Y)		External (WxHxA)		
Product	278x401		330x1326x453		

x4

10.583 Graphic Size: A3 with A4 x1

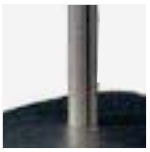

MADE IN EUROPE

MELGAR
TWO-SIDED

INFORMATION

* W: Width H: Height D: Depth * mm

This Menu Stand features a sturdy aluminium structure with plastic parts. Its Click System frame allows an easy and quick graphic change (anti-reflex cover included). Frames features portrait or a landscape configuration. Also Melgar is available with an A4 leaflet dispenser. It is ideal for retail stores, hotel lobbies, restaurant entrances, car dealerships and real states. Melgar is sure to attract the attention of your target audience.

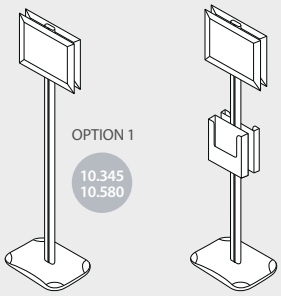

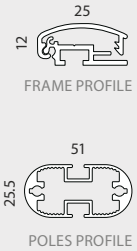

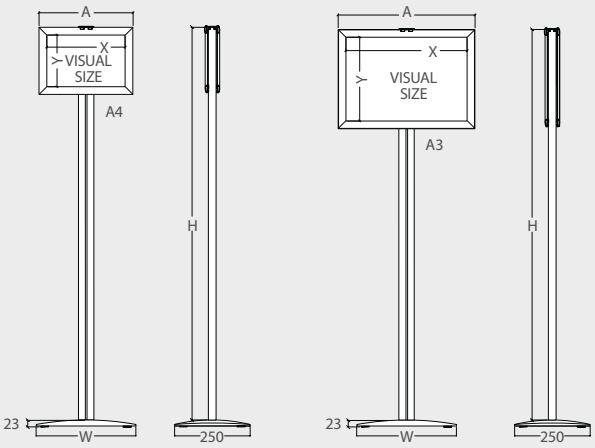

aluminium profiles 25mm

MELGAR A4 2SIDED

* W: Width H: Height D: Depth *mm

	QTY	N.W	G.W	C.B.M	Size (WxHxD)
Packing	1	1.15kg	1.25kg	0.0035	65x1340x40
	1	2.8kg	2.93kg	0.0036	263x388x35
	2	0.82kg	0.91kg	0.0024	350x270x25
	Visual (X-Y)		External (WxHxA)		
Product	190x278		330x1326x329		

x4

10.345 Graphic Size: A4

MELGAR A3 2SIDED

* W: Width H: Height D: Depth *mm

	QTY	N.W	G.W	C.B.M	Size (WxHxD)
Packing	1	1.15kg	1.25kg	0.0035	65x1340x40
	1	2.8kg	2.93kg	0.0036	263x388x35
	2	1.44kg	1.74kg	0.0042	475x355x25
	Visual (X-Y)		External (WxHxA)		
Product	278x401		330x1326x453		

x4

10.580 Graphic Size: A3

MELGAR A4 2S+2 DISPENSERS

* W: Width H: Height D: Depth *mm

	QTY	N.W	G.W	C.B.M	Size (WxHxD)
Packing	1	1.15kg	1.25kg	0.0035	65x1340x40
	1	2.8kg	2.93kg	0.0036	263x388x35
	2	0.4kg	0.55kg	0.0029	235x250x50
	2	0.82kg	0.91kg	0.0024	350x270x25
	Visual (X-Y)		External (WxHxA)		
Product	190x278		330x1326x311		

x6

10.549 Graphic Size: A4 with A4 x2

MELGAR A3 2S+2 DISPENSERS

* W: Width H: Height D: Depth *mm

	QTY	N.W	G.W	C.B.M	Size (WxHxD)
Packing	1	1.15kg	1.25kg	0.0035	65x1340x40
	1	2.8kg	2.93kg	0.0036	263x388x35
	2	0.4kg	0.55kg	0.0029	235x250x50
	2	1.44kg	1.74kg	0.0042	475x355x25
	Visual (X-Y)		External (WxHxA)		
Product	278x401		330x1326x453		

x6

10.584 Graphic Size: A3 with A4 x2

supplied in complete kits

MADE IN EUROPE

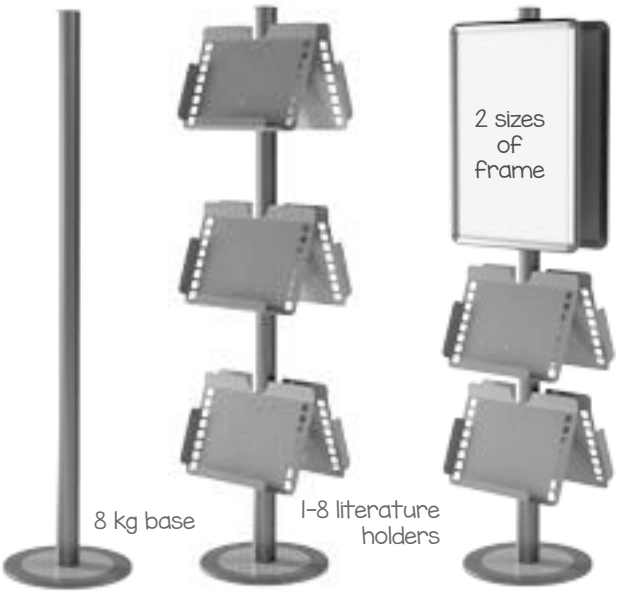

COMBI

EN	Full set of holders of easy assembly. The displays "Combi" are supplied in complete Kits. Made of aluminum and steel.
FR	Support porte brochures en aluminium et métal. Assemblage facile, plusieurs configurations sont possibles.
PT	Sistema completo de porta-folhetos e/ou marcos. Os display fornecem-se em kits completos. Fabricados em alumínio e aço.
ES	Sistema completo de portafolletos y/o portagráficas. Los displays se suministran en Kits completos y están realizados en aluminio y acero.

INFORMATION * W: Width H: Height D: Depth * mm

The Combi Display system consists of an aluminium pole profile, a solid 8kg base and multiple possible configurations to choose from, featuring the number of literature holders trays (1-8 units), the possibility of incorporating one or more click system frames (different sizes available) or the possibility of adding a double-sided design. Each of the 4 literature trays can hold either 2 units of A4 sized brochures or 1 extra wide magazine. The Combi Displays are ideal for trade shows, lobby areas, hotel lobbies, shopping malls or for the gymnasiums.

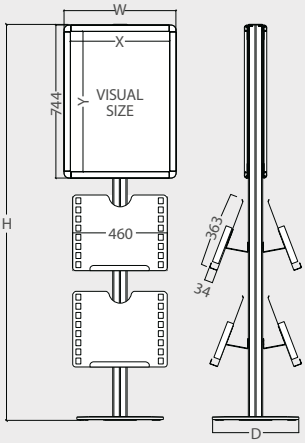

COMBI ONE

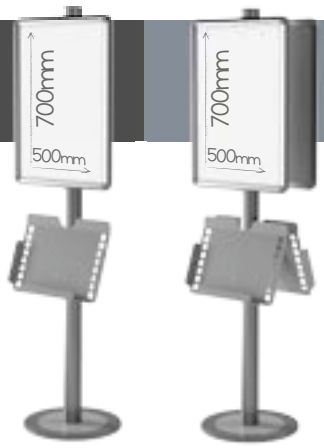

COMBI ONE 1SIDED * W: Width H: Height D: Depth *mm

	QTY	N.W	G.W	C.B.M	Size (WxHxD)	
Packing	1	2.8kg	3.6kg	0.0123	80x1920x80	x4
	1	8.2kg	8.5kg	0.0097	440x440x50	
	1	1.95kg	2.2kg	0.0089	380x470x50	
	1	1.95kg	2.4kg	0.0104	560x745x25	
	Visual (X-Y)		External (WxHxD)			
Product	481x681		544x1922xØ420			

10.479 Graphic Size: 500x700

COMBI ONE 2SIDED * W: Width H: Height D: Depth *mm

	QTY	N.W	G.W	C.B.M	Size (WxHxD)	
Packing	1	2.8kg	3.6kg	0.0123	80x1920x80	x6
	1	8.2kg	8.5kg	0.0097	440x440x50	
	2	1.95kg	2.2kg	0.0089	380x470x50	
	2	1.95kg	2.4kg	0.0104	560x745x25	
	Visual (X-Y)		External (WxHxD)			
Product	481x681		544x1922xØ420			

10.480 Graphic Size: 500x700 (x2)

COMBI TWO

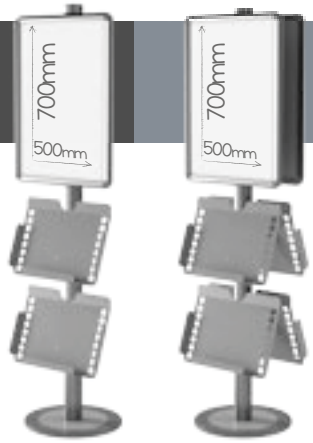

COMBI TWO 1SIDED * W: Width H: Height D: Depth *mm

	QTY	N.W	G.W	C.B.M	Size (WxHxD)	
Packing	1	2.8kg	3.6kg	0.0123	80x1920x80	x5
	1	8.2kg	8.5kg	0.0097	440x440x50	
	2	1.95kg	2.2kg	0.0089	380x470x50	
	1	1.95kg	2.4kg	0.0104	560x745x25	
	Visual (X-Y)		External (WxHxD)			
Product	481x681		544x1922xØ420			

10.485 Graphic Size: 500x700

COMBI TWO 2SIDED * W: Width H: Height D: Depth *mm

	QTY	N.W	G.W	C.B.M	Size (WxHxD)	
Packing	1	2.8kg	3.6kg	0.0123	80x1920x80	x8
	1	8.2kg	8.5kg	0.0097	440x440x50	
	4	1.95kg	2.2kg	0.0089	380x470x50	
	2	1.95kg	2.4kg	0.0104	560x745x25	
	Visual (X-Y)		External (WxHxD)			
Product	481x681		544x1922xØ420			

10.486 Graphic Size: 500x700 (x2)

COMBI THREE

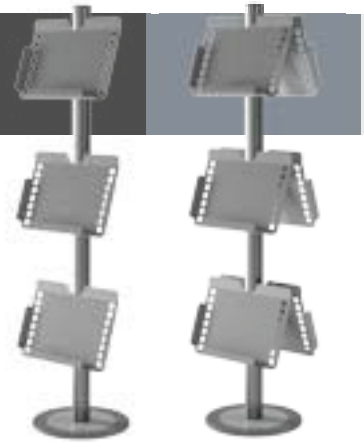

COMBI THREE 1SIDED * W: Width H: Height D: Depth *mm

	QTY	N.W	G.W	C.B.M	Size (WxHxD)
Packing	1	2.8kg	3.6kg	0.0123	80x1920x80
	1	8.2kg	8.5kg	0.0097	440x440x50
	3	1.95kg	2.2kg	0.0089	380x470x50
	External (WxHxD)				
Product	460x1922xØ420				

x5

10.483

COMBI THREE 2SIDED * W: Width H: Height D: Depth *mm

	QTY	N.W	G.W	C.B.M	Size (WxHxD)
Packing	1	2.8kg	3.6kg	0.0123	80x1920x80
	1	8.2kg	8.5kg	0.0097	440x440x50
	6	1.95kg	2.2kg	0.0089	380x470x50
	External (WxHxD)				
Product	544x922xØ420				

x8

10.484

COMBI FOUR

COMBI FOUR 1SIDED * W: Width H: Height D: Depth *mm

	QTY	N.W	G.W	C.B.M	Size (WxHxD)
Packing	1	2.8kg	3.6kg	0.0123	80x1920x80
	1	8.2kg	8.5kg	0.0097	440x440x50
	4	1.95kg	2.2kg	0.0089	380x470x50
	External (WxHxD)				
Product	544x1922xØ420				

x6

10.481

COMBI FOUR 2SIDED * W: Width H: Height D: Depth *mm

	QTY	N.W	G.W	C.B.M	Size (WxHxD)
Packing	1	2.8kg	3.6kg	0.0123	80x1920x80
	1	8.2kg	8.5kg	0.0097	440x440x50
	8	1.95kg	2.2kg	0.0089	380x470x50
	External (WxHxD)				
Product	544x1922xØ420				

x10

10.482

COMBI MIX

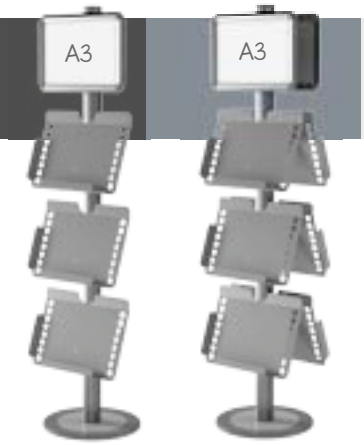

COMBI MIX 1SIDED * W: Width H: Height D: Depth *mm

	QTY	N.W	G.W	C.B.M	Size (WxHxD)
Packing	1	2.8kg	3.6kg	0.0123	80x1920x80
	1	8.2kg	8.5kg	0.0097	440x440x50
	3	1.95kg	2.2kg	0.0089	380x470x50
	1	1kg	1.2kg	0.0061	365x480x35
	Visual (X-Y)		External (WxHxD)		
Product	481x681		544x1922xØ420		

x6

10.487 Graphic Size: A3

COMBI MIX 2SIDED * W: Width H: Height D: Depth *mm

	QTY	N.W	G.W	C.B.M	Size (WxHxD)
Packing	1	2.8kg	3.6kg	0.0123	80x1920x80
	1	8.2kg	8.5kg	0.0097	440x440x50
	6	1.95kg	2.2kg	0.0089	380x470x50
	2	1kg	1.2kg	0.0061	365x480x35
	Visual (X-Y)		External (WxHxD)		
Product	278x402		460x1922xØ420		

x10

10.488 Graphic Size: A3 (x2)

COMBI FRAME

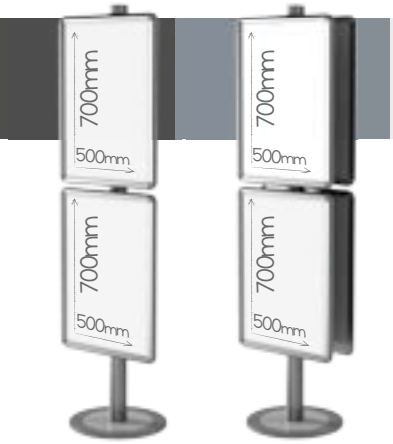

COMBI FRAME 1SIDED * W: Width H: Height D: Depth *mm

	QTY	N.W	G.W	C.B.M	Size (WxHxD)
Packing	1	2.8kg	3.6kg	0.0123	80x1920x80
	1	8.2kg	8.5kg	0.0097	440x440x50
	2	1.95kg	2.4kg	0.0104	560x745x25
	Visual (X-Y)		External (WxHxD)		
Product	481x681		544x1922xØ420		

x4

10.489 Graphic Size: 500x700

COMBI FRAME 2SIDED * W: Width H: Height D: Depth *mm

	QTY	N.W	G.W	C.B.M	Size (WxHxD)
Packing	1	2.8kg	3.6kg	0.0123	80x1920x80
	1	8.2kg	8.5kg	0.0097	440x440x50
	4	1.95kg	2.4kg	0.0104	560x745x50
	Visual (X-Y)		External (WxHxD)		
Product	481x681		544x1922xØ420		

x6

10.490 Graphic Size: 500x700 (x2)

TABLET STAND

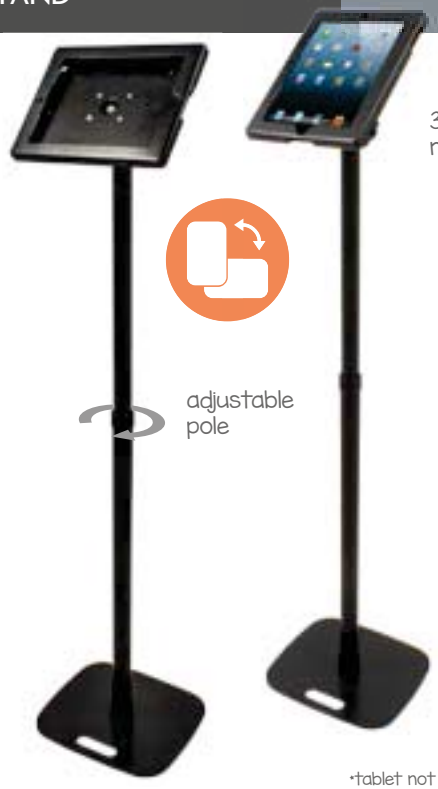

*tablet not included

INFORMATION * W: Width H: Height D: Depth * mm

This stylish secure tablet floor stand is designed for both sitting and standing thanks its telescopic pole. It has a stunning black finish. Also, an anti-theft system keeps the technology safely locked for secured public use and provides owners with a key for access. Users may easily rotate 360° or tilt the bracket of the adjustable tablet floor stand for different viewing angles. Tablet Holder has foam pads for a better grip and to prevent the scratches. The touchscreen holder's unique design allows access to the home and power buttons while also leaving the auxiliary port open, perfect for credit card readers. Ideal for trade shows, academies, exhibitions or events.

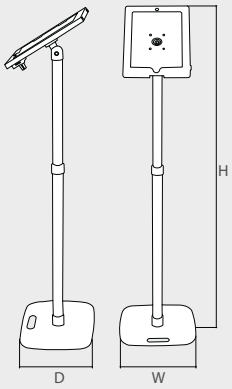

TABLET STAND * W: Width H: Height D: Depth *mm

	QTY	N.W	G.W	C.B.M	Size (WxHxD)
Packing	1	4kg	4.25kg	0.037	395x760x125
	External (WxHxD)				
Product	245x1350x280				
10.306	For Tablet: ± 242.8x189.7mm				

TABLET SUPPORT FOR WALL OR DESK

INFORMATION * W: Width H: Height D: Depth * mm

This Support for tablets is designed for desk or wall mountaing. Also, an anti-theft system keeps the technology safely locked for secured public use and provides owners with a key for access. Tablet Holder has foam pads for a better grip and to prevent the scratches. The touchscreen holder's unique design allows access to the home and power buttons while also leaving the auxiliary port open, perfect for credit card readers. Users may easily rotate 90° the bracket for different viewing angles. Ideal for mounting your device in stores, trade shows, academies or events.

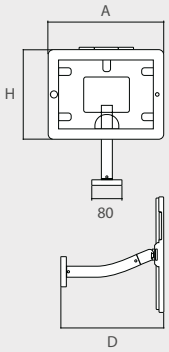

TABLET WALL | DESK * W: Width H: Height D: Depth *mm

	QTY	N.W	G.W	C.B.M	Size (WxHxD)
Packing	1	1kg	1.55kg	0.006	365x92x204
	External (WxHxD)				
Product	248x194x270				
14.108	For Tablet: ± 240x185mm				

SLIGO METALLIC

MADE IN EUROPE

INFO * W: Width H: Height D: Depth

The Sligo Lectern is available with a metallic double-A4 reading surface for displaying documents or menus thanks to its brochure holder rings. Sligo is perfect for auditoriums, restaurant entrances or for convention centers.

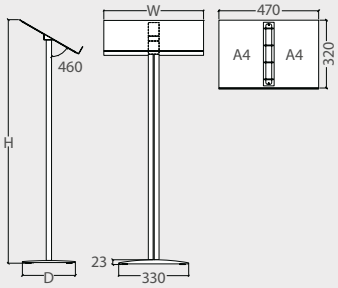

SLIGO METALLIC * W: Width H: Height D: Depth *mm

	QTY	N.W	G.W	C.B.M	Size (WxHxD)
Packing	1	4.3kg	4.7kg	0.0107	330x500x65
	1	1.15kg	1.3kg	0.0028	40x1070x65
	External (WxHxD)				
Product	470x1147x250				

x2

10.984 — Literature Holder: A4 (x2)

SLIGO ACRYLIC

MADE IN EUROPE

INFO * W: Width H: Height D: Depth

Also, Sligo Lectern is available with an acrylic double-A4 reading surface for displaying documents or menus thanks to its brochure holder rings. Sligo is perfect for auditoriums, restaurant entrances or for convention centers.

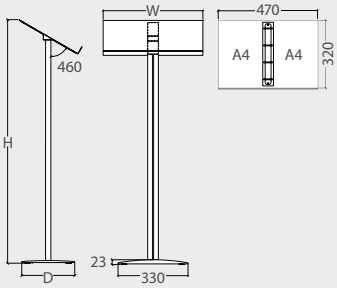

SLIGO ACRYLIC * W: Width H: Height D: Depth *mm

	QTY	N.W	G.W	C.B.M	Size (WxHxD)
Packing	1	2.75kg	3kg	0.0107	330x500x65
	1	1.15kg	1.3kg	0.0028	40x1070x65
	External (WxHxD)				
Product	470x1147x250				

x2

10.983 — Literature Holder: A4 (x2)

SOLANA

EN	Extendable aluminium tripod. Ideal for using with aluminium frames.
FR	Trépied extensible, en aluminium. Idéal pour y placer des cadres.
PT	Tripé extensível em alumínio. Ideal para colocação de marcos.
ES	Trípode extensible, en aluminio. Ideal para la colocación de marcos.

INFORMATION * W: Width H: Height D: Depth * mm

Solana is made with an aluminum alloy that is strong and stable, featuring adjustable height, so its telescopic legs can be shortened for table top use or lengthened for a floor standing display, This telescoping aluminum easel is a versatile method to use for any type of showcase. Whether you're travelling for tradeshows or art exhibits, use this silver telescoping easel for a durable, yet convenient tool to display your work.

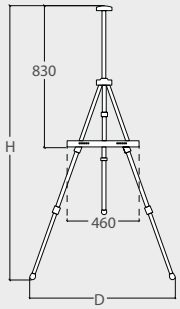

SOLANA * W: Width H: Height D: Depth *mm

	QTY	N.W	G.W	C.B.M	Size (WxHxD)
Packing	1	0.65kg	0.75kg	0.0035	80x560x80
	External (WxHxD)				
Product	780x1605x900				

10.816 — Height: 1605mm Maximum

ALUMINIUM LECTERN

MADE IN EUROPE

NEW

* W: Width H: Height D: Depth * mm

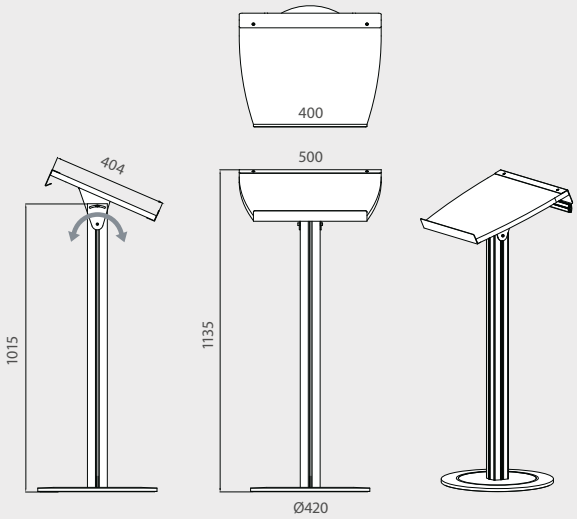

INFORMATION

* W: Width H: Height D: Depth * mm

This aluminium lectern includes a 19mm thickness white wooden reading surface with a matching aluminum post and circular base offering modern visual displays. The reading surface on this lectern includes a book stop to support your notes during a presentation for award recipients, sheet music for a performance, or a seating chart to assist a hostess, also it features an adjustable angle view for the reading surface. With its sleek contemporary design, this podium is easy to assemble, requiring only a screwdriver and a few minutes. Its silver aluminum pole and base are durable and will last through years of performances and presentations This stylish yet affordable lectern is a great addition to any presentation space, such as auditoriums, restaurants for menu displays or convention centers to attract the attention of your audience.

ALUMINIUM LECTERN

* W: Width H: Height D: Depth *mm

	QTY	N.W	G.W	C.B.M	Size (WxHxD)
Packing	1	8.2kg	8.5kg	0.0097	440x440x50
	1	1.59kg	1.75kg	0.0067	80x80x1040
	1	3.95kg	4.7kg	0.0413	530x445x175
	External (WxHxD)				
Product	± 500x1135x420				

x3

13.640

OPTIONAL ACCESSORY

The back of the surface of this Lectern provides the possibility of attaching an Alulon Poster System (Ref: 10571) to place a banner and customize the look of the lectern. For more information, see the article in chapter 1 of this catalog.

no tools required!

no screws!

FAST WOODEN LECTERN

MADE IN EUROPE

NEW

* Tablet not included

* W: Width H: Height D: Depth * mm

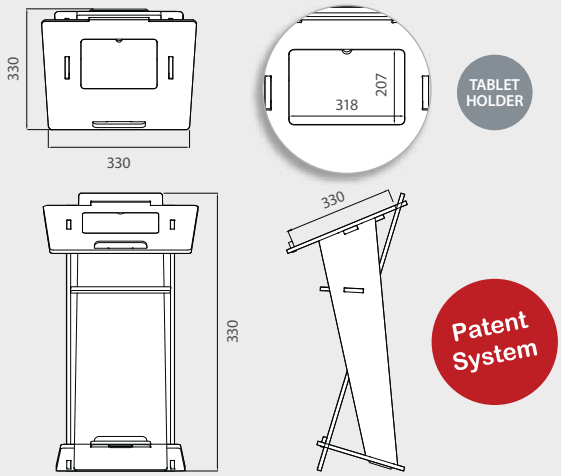

INFORMATION

* W: Width H: Height D: Depth * mm

This stunning wooden lectern does not require the use of any tools for its assembly thanks its Patent System. Each of its 10 pieces is designed to complete a sturdy and firm structure in very few steps. It is made of 16mm thickness Waterproof MDF Wood with a natural stylish grey finish. It features one shelf in the interior of the lectern, so this way, the extra brochures, business cards and documents can be stored out of sight so your exhibition always appears clean and organized. Also, it features a 318x207mm holder at the top surface for placing securely a tablet. The Fast Wooden Lectern is ideal for being used at auditoriums or convention centers to attract the attention of your audience.

10 MANUALLY ATTACHABLE PARTS

WOODEN LECTERN

*mm

	QTY	N.W	G.W	C.B.M	Size (WxHxD)
Packing	1	19kg	21.41kg	0.0832	605x105x1310

13.641

EN Brochure and catalogue stands for A4 or A5 formats, made in different materials.

FR Support pour brochure et catalogue au format A4 ou A5. Différents matériaux.

PT Porta folhetos ou catálogos em formatos A4 ou A5. Disponíveis em vários materiais.

ES Portafolletos y portacatálogos para formatos A4 o A5, en diferentes materiales.

SAGRES ACRYLIC

MADE IN EUROPE

acrylic

* W: Width H: Height D: Depth * mm

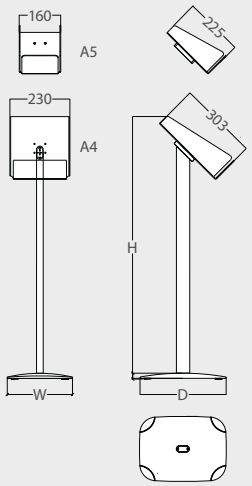

SAGRES METALLIC

MADE IN EUROPE

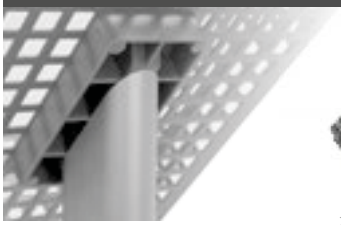

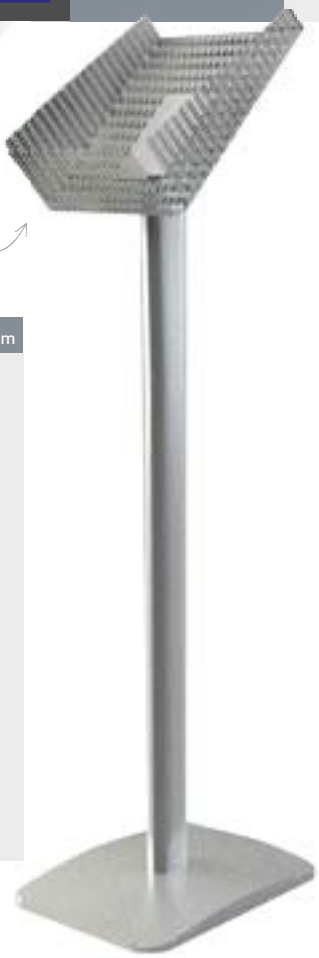

steel

* W: Width H: Height D: Depth * mm

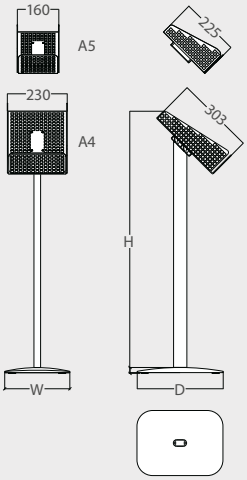

INFORMATION

* W: Width H: Height D: Depth * mm

The Sagres brochure tray stand features an acrylic literature holder available for A4 or A5 format documents, an aluminium profile structure with a highly resistant and solid base, which ensures that the unit stays upright in heavily trafficked areas. The silver finish provides a neutral tone that will complement any commercial environment. Sagres as holder of informational catalogs, flyers, brochures or promotional documents is ideal for tradeshows, mall stores, exhibitions, media events or places with a high traffic area.

INFORMATION

* W: Width H: Height D: Depth * mm

Also, Sagres brochure tray stand features an steel literature holder available for A4 or A5 format documents, an aluminium profile structure with a highly resistant and solid base, which ensures that the unit stays upright in heavily trafficked areas. The silver finish provides a neutral tone that will complement any commercial environment. Sagres as holder of informational catalogs, flyers, brochures or promotional documents is ideal for tradeshows, mall stores, exhibitions, media events or places with a high traffic area.

SAGRES ACRYLIC

* W: Width H: Height D: Depth *mm

	QTY	N.W	G.W	C.B.M	Size (WxHxD)
Packing	1	3.1kg	3.4kg	0.0322	295x120x910
	External (WxHxD)				
Product	± 250x1000x330				

NEW 13.775	BROCHURE HOLDER SIZE: A5
10.473	BROCHURE HOLDER SIZE: A4

SAGRES METALLIC

* W: Width H: Height D: Depth *mm

	QTY	N.W	G.W	C.B.M	Size (WxHxD)
Packing	1	3.2kg	3.5kg	0.0322	295x120x910
	External (WxHxD)				
Product	± 250x1000x330				

NEW 13.776	BROCHURE HOLDER SIZE: A5
10.474	BROCHURE HOLDER SIZE: A4

BROCHURE STAND | Leaflet Stand | Ballot Box Stand

EN Leaflet dispenser and ballot box stands made in acrylic / polystyrene and aluminium structure. Decorative interchangeable cover for the base.

FR Porte-brochure avec un support pour urne fabriqué en acrylique / polystyèrene et aluminium. L'élément décoratif du socle est interchangeable.

PT Porta-folhetos com suporte para urna, fabricado em acrílico / poliestireno e alumínio. Possui um elemento decorativo na base que se pode mudar.

ES Portafolletos y stand para urna, realizados en acrílico / poliestireno y estructura en aluminio. Elemento decorativo intercambiable para la base.

LEAFLET DISPENSER STAND

MADE IN EUROPE

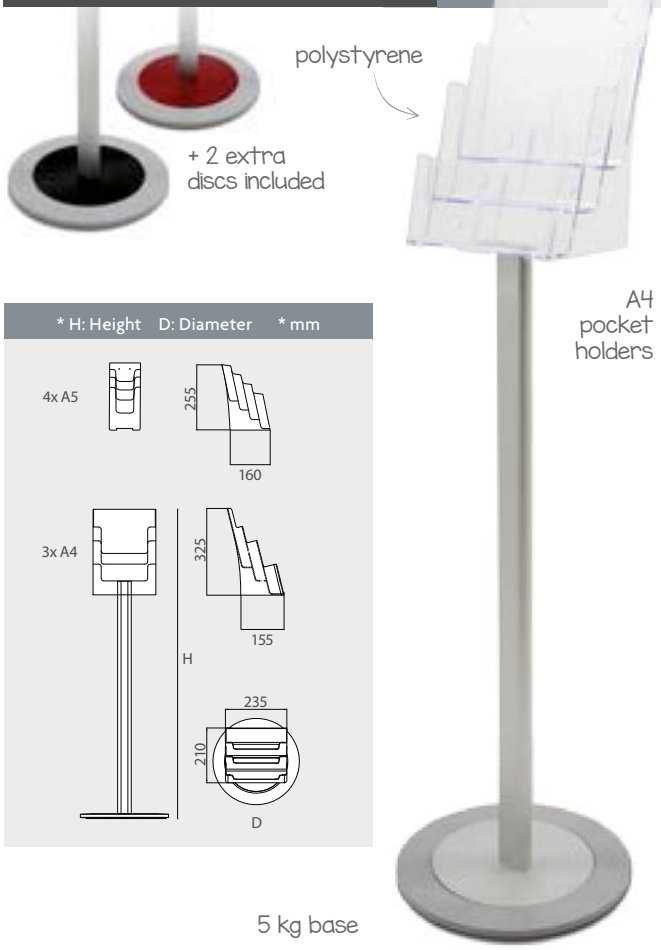

BALLOT BOX STAND

MADE IN EUROPE

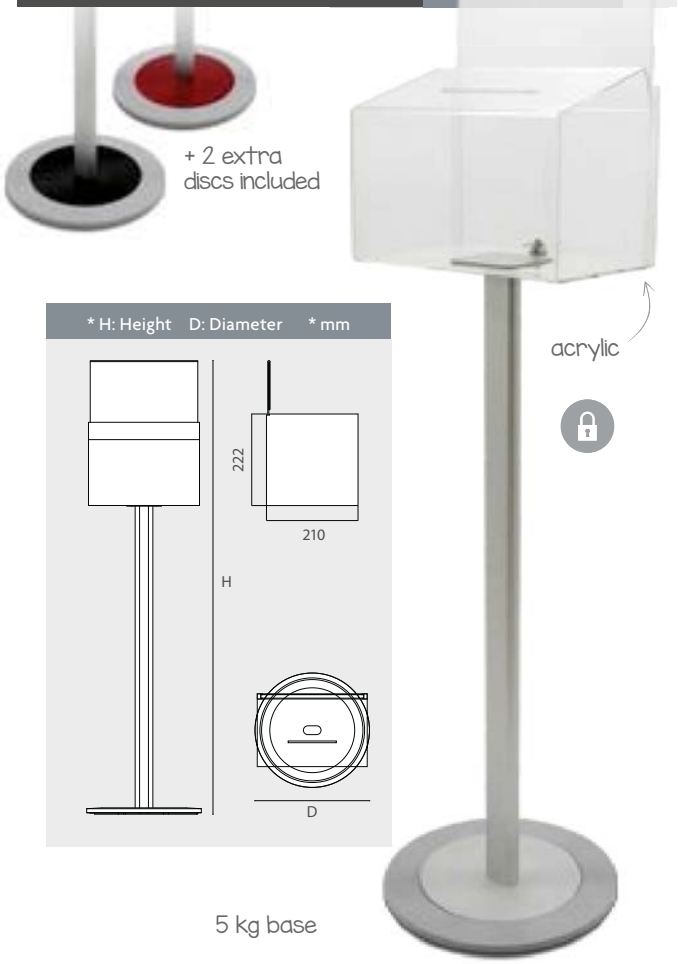

INFORMATION

* W: Width H: Height D: Depth * mm

This acrylic standing has 2 leaflet dispenser sizes available: A4 (3 pockets) or A5 format (4 pockets) for displaying documents like brochures, flyers, or catalogues. Featuring a solid 5kg base with 2 decorative interchangeable extra covers (included). The acrylic brochure holder arrives in a separate box from the base and pole stand. Simply attach a brochure holder to the pole and you are ready to display promotional literature. These floorstanding leaflet dispenser are also ideal for special promotions at various events, like tradeshows, hotels information, restaurants, retailers, corporate events or places with a high traffic area.

INFORMATION

* W: Width H: Height D: Depth * mm

This acrylic standing ballot box is designed for gathering customer feedback, complaints, ideas or contests. Featuring a solid 5kg base with 2 decorative interchangeable covers to customize on red or black color. Also, includes lock system that keeps entries secure and confidential (with keys for access) and an upper A4 format sign holder for promoting the event. These floorstanding ballot boxes are also ideal for raffles and contests at various events. Some of the places that an employee suggestion box can be found are a trade show, corporate events, hotels, restaurants, retailers, etc.

LEAFLET STAND

* W: Width H: Height D: Depth *mm

	QTY	N.W	G.W	C.B.M	Size (WxHxD)
Packing	1	5kg	5.3kg	0.0055	350x35x45
	1	0.70kg	0.85kg	0.0035	895x65x37
	1	1.1kg	1.5kg	0.0194	330x230x260
	External (HxD)				
Product	1170xØ330				

x3

NEW

13.777 LEAFLET DISPENSER SIZE: A5

14.100 LEAFLET DISPENSER SIZE: A4

BALLOT BOX

* W: Width H: Height D: Depth *mm

	QTY	N.W	G.W	C.B.M	Size (WxHxD)
Packing	1	5kg	5.3kg	0.0055	350x350x45
	1	0.70kg	0.85kg	0.0035	895x65x37
	1	1.7kg	2.4kg	0.0332	380x265x330
	External (HxD)				
Product	1323xØ330				

x3

14.101

BARI

with header top for customizing with logo

MADE IN EUROPE

INFORMATION * W: Width H: Height D: Depth * mm

This Brochure Stand features a strong and stable design and it is made of steel with a silver finish to easily match any environment. Featuring a top holder which allows the placement of 2xA4 wide documents. It also organizes and displays your magazines in an orderly manner with an open-front design for customers to easily access the publications. This Brochure Stand is used to display A4 format. Bari is ideal for displaying travel magazines, real estate booklets, autos-for-sale publications, bussiness catalogues and other types of literature.

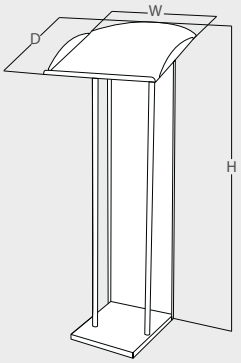

stand top allows the placement of 2xA4

ideal for catalogues

made of steel

BARI * W: Width H: Height D: Depth *mm

	QTY	N.W	G.W	C.B.M	Size (WxHxD)
Packing	1	8.6kg	11kg	0.3125	500x1250x500
	External (WxHxD)				
Product	455x1210x450				

10.219

VEGAS

made of plastic and chromed steel

INFORMATION * W: Width H: Height D: Depth * mm

Vegas Brochure Stand offers the looks and stability of a permanent fixture and the versatility of a portable stand. Featuring 4xA4 format pockets. This foldable silver tradeshow literature rack can be stored with pamphlets and magazines in the pockets, even when the unit is collapsed and stowed away. Set up is simple, just taking the unit out of the carrying bag and pulling the pockets upward. This unique design is perfect for businesses that regularly attend conventions, tradeshows, exhibitions, media events or places with a high traffic area. Also with such a lightweight design, this tradeshow literature rack will quickly become a vital component of your booth system.

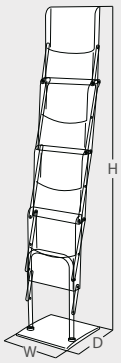

A4 format

foldable

VEGAS * W: Width H: Height D: Depth *mm

	QTY	N.W	G.W	C.B.M	Size (WxHxD)
Packing	1	6kg	8kg	0.067	380x470x380
	External (WxHxD)				
Product	280x1605x260				

10.048

with carry-bag

SOUBRAN

INFORMATION * W: Width H: Height D: Depth * mm

Soubran is designed to be mobile and compact. In this model it features 5 portrait steel pockets which are designed to accommodate A4 portrait format documents. This tradeshow literature rack can be stored with pamphlets and magazines in the pockets, even when the unit is collapsed and stowed away. This brochure stand folds up into a small, lightweight unit. Also, for a simple transportation it includes a nylon carry-bag. With such a lightweight, simple design, this tradeshow literature rack will quickly become a vital component of your booth system. Soubran features a front bottom space which can be used to place a graphic. Use this portable literature stand as a literature display at trade shows, conventions, exhibitions, retail outlets or showroom floors to attract customers looking for additional information.

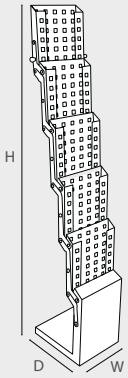

SOUBRAN * W: Width H: Height D: Depth *mm

	QTY	N.W	G.W	C.B.M	Size (WxHxD)
Packing	1	8kg	10kg	0.148	550x770x350
	External (WxHxD)				
Product	230x1420x290				

10.416

with carry-bag

COLMENAR

INFORMATION * W: Width H: Height D: Depth * mm

Colmenar is designed to be mobile and compact. In this model it features 5 portrait acrylic pockets which are designed to accommodate A4 portrait format documents. This tradeshow literature rack can be stored with pamphlets and magazines in the pockets, even when the unit is collapsed and stowed away. This brochure stand folds up into a small, lightweight unit. Also, for a simple transportation it includes a nylon carry-bag. With such a lightweight, simple design, this tradeshow literature rack will quickly become a vital component of your booth system. Colmenar features a front bottom space which can be used to place a graphic. Use this portable literature stand as a literature display at trade shows, conventions, exhibitions, retail outlets or showroom floors to attract customers looking for additional information.

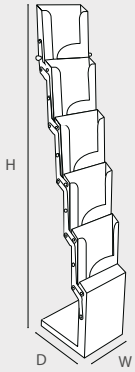

COLMENAR * W: Width H: Height D: Depth *mm

	QTY	N.W	G.W	C.B.M	Size (WxHxD)
Packing	1	5kg	7kg	0.148	550x770x350
	External (WxHxD)				
Product	230x1420x290				

13.718

SAHAGUN

nylon bag
option 13.717

foldable

5xA4
portrait
shelves

stable base
by secure
system

* W: Width H: Height D: Depth * mm

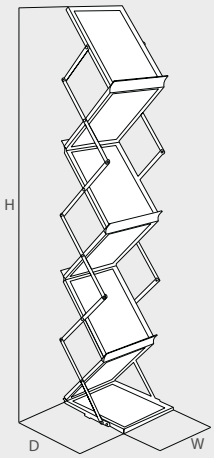

option 1
13.717 Nylon Bag

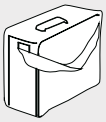

option 2
10.047 Briefcase

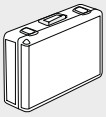

INFORMATION

Sahagun is designed to be mobile and compact. It has a zigzag design that folds down into a small unit. Featuring 5xA4 format literature holders for displaying. The literature holders provide a multi-level display system with an unobstructed view of magazines, brochures or any other periodicals you wish to display, also it is ver lightweight thanks to its aluminium structure and acrylic holders.This brochure stand folds up into a small, lightweight unit. For a simple transportation you can choose between the nylon carry-bag or the deluxe briefcase option, which has reinforced foam padded. Use this portable literature stand as a single or double sided display at trade shows, retail outlets, or showroom floors to attract customers looking for additional information.

briefcase
option 10.047

SAHAGUN * W: Width H: Height D: Depth ***mm**

	QTY	N.W	G.W	C.B.M	Size (WxHxD)
Packing	1	7.35kg	7.95kg	0.0293	360x480x170
	External (WxHxD)				
Product	260x1490x350				
✻ 13.717	Nylon Travel Bag				
✻ 10.047	Briefcase				

with secure system

MENTRIDA

5xA4 portrait pockets

made in black painted steel

the bottom can be used to place a graphic

INFORMATION * W: Width H: Height D: Depth * mm

This Brochure Stand features a strong and stable design with a black finish to easily match any environment. Featuring a top header and a front bottom area which allows the placement of graphics. It also organizes and displays your magazines in an orderly manner with an open-front design for customers to easily access the publications. The Mentrida Stand features 5 pockets for displaying A4 portrait format documents. Mentrida is ideal for travel magazines, real estate booklets, autos-for-sale publications, bussiness catalogues and other types of literature These displays are also great for use at libraries, schools, hospitals or doctors' offices.

MENTRIDA * W: Width H: Height D: Depth ***mm**

	QTY	N.W	G.W	C.B.M	Size (WxHxD)
Packing	1	4.2kg	5.1kg	0.0565	120x1520x310
	External (WxHxD)				
Product	250x1465x470				

✻10.720

1370mm height

BAÑEZA

7xA4 portrait pockets

made in black painted steel

the bottom can be used to place a graphic

INFORMATION * W: Width H: Height D: Depth * mm

This Brochure Stand features a strong and stable design with a black finish to easily match any environment. Featuring a top header and a front bottom area which allows the placement of graphics. It also organizes and displays your magazines in an orderly manner with an open-front design for customers to easily access the publications. This Stand features 7 pockets for displaying A4 portrait format documents. Bañeza is ideal for travel magazines, real estate booklets, autos-for-sale publications, bussiness catalogues and other types of literature These displays are also great for use at libraries, schools, hospitals or doctors' offices.

BAÑEZA * W: Width H: Height D: Depth ***mm**

	QTY	N.W	G.W	C.B.M	Size (WxHxD)
Packing	1	2.9kg	3.6kg	0.0532	100x1420x375
	External (WxHxD)				
Product	280x1370x370				

✻10.044

quick and
simple mounting

SIL
SIMPLE

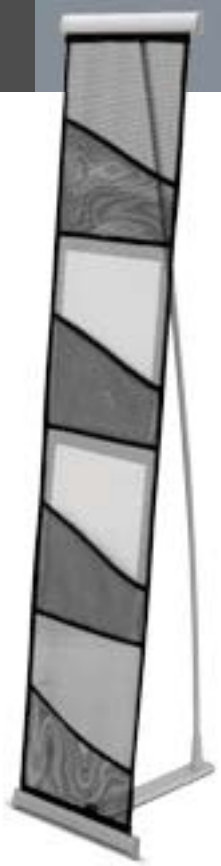

4xA4
pockets

made of nylon
and aluminium

INFORMATION * W: Width H: Height D: Depth * mm

With a lightweight design and an easy setup Sil Brochure Stand is perfect for exhibitors who need a lightweight and portable display for their tradeshow booth. This magazine stand is made of black mesh and has 4 pockets for A4 Portrait format documents. Featuring an elastic design to the pockets that keeps reading materials secure and erect while on display. No additional tools are required to set up or take down this portable tradeshow accessory. Includes carrying-bag. Sil is ideal for travel magazines, autos-for-sale publications, bussiness catalogues and other types of literature These displays are also great for use at libraries, schools or offices.

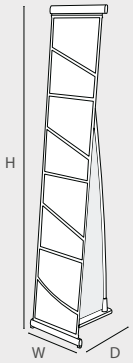

SIL SIMPLE * W: Width H: Height D: Depth ***mm**

	QTY	N.W	G.W	C.B.M	Size (WxHxD)
Packing	1	1.05kg	1.20kg	0.0086	120x600x120
	External (WxHxD)				
Product	270x1360x380				
10.051	4 xA4 Pockets				

quick and
simple mounting

SIL
DOUBLE

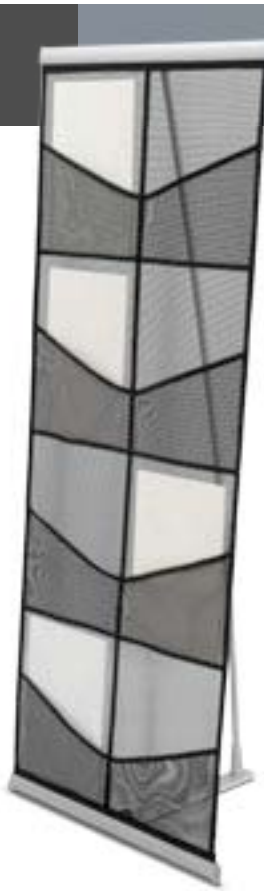

8xA4
pockets

made of nylon
and aluminium

INFORMATION * W: Width H: Height D: Depth * mm

With a lightweight design and an easy setup Sil Double Brochure Stand is perfect for exhibitors who need a lightweight and portable display for their tradeshow booth. This magazine stand is made of black mesh and has 8 pockets for A4 Portrait format documents. Featuring an elastic design to the pockets that keeps reading materials secure and erect while on display. No additional tools are required to set up or take down this portable tradeshow accessory. Includes carrying-bag. Sil is ideal for travel magazines, autos-for-sale publications, bussiness catalogues and other types of literature These displays are also great for use at libraries, schools or offices.

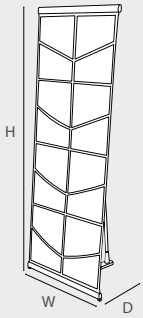

SIL DOUBLE * W: Width H: Height D: Depth ***mm**

	QTY	N.W	G.W	C.B.M	Size (WxHxD)
Packing	1	1.4kg	1.55kg	0.0086	120x600x120
	External (WxHxD)				
Product	545x1360x380				
10.050	8 xA4 Pockets				

made of acrylic and aluminium

LEGNICA

INFORMATION * W: Width H: Height D: Depth * mm

The combination of contemporary design, durability and portability make Legnica display one of the best options for literature displaying. Featuring a front bottom area which allows the placement of a logo. Its design allows you to leave literature inside the pockets when the unit is collapsed. This Stand features 8 pockets for displaying A4 portrait format documents. Legnica Stand is ideal for travel magazines, real estate booklets, autos-for-sale publications, bussiness catalogues and other types of literature and also they are great for being used at libraries, schools, hospitals, doctor's offices, tradeshows, conventions or at showroom floors.

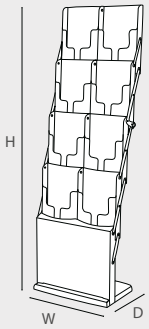

LEGNICA * W: Width H: Height D: Depth *mm

	QTY	N.W	G.W	C.B.M	Size (WxHxD)
Packing	1	14.4kg	15.5kg	0.109	355x570x540
	External (WxHxD)				
Product	480x1560x300				
10.114					

with wheels

NELAS

INFORMATION * W: Width H: Height D: Depth * mm

The Nelas Brochure Stand is designed for an easy rotation and quick selection and can be used to hold magazines, flyers and other publications. With 21 pockets for displaying A4 portrait format documents. Also known as literature holder, is made of lightweight and durable wire. Featuring 5 swivel castors for an easy and comfortable transport. These displays are great for use at libraries, schools, offices, trade shows, conventions, exhibitions, travel agencies, attraction places, waiting rooms, retail outlets or showroom floors.

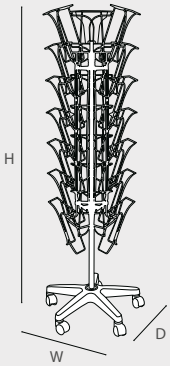

NELAS * W: Width H: Height D: Depth *mm

	QTY	N.W	G.W	C.B.M	Size (WxHxD)
Packing	1	8kg	10.05kg	0.203	530x320x1200
	External (WxHxD)				
Product	510x1550x510				
13.101					

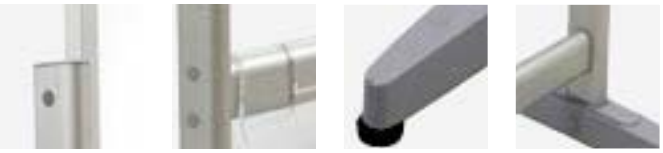

POLAN
BOARD DISPLAY

MADE IN EUROPE

NEW

made of acrylic and aluminium

* W: Width H: Height D: Depth * mm

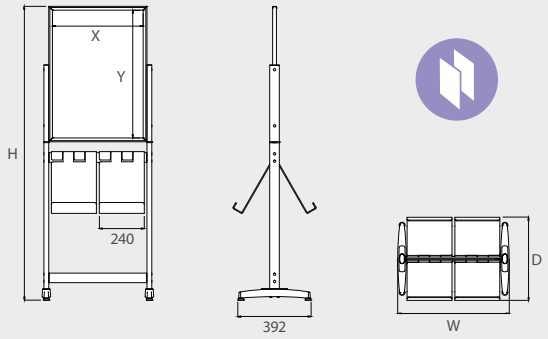

INFORMATION

The Double-sided Polan Board Display is made of aluminium with acrylic shelves. This model has 4 acrylic shelves for 4xA4 format literature documents, like brochures, journals, periodicals or newspapers. Also it features an aluminium frame header at the top. With adjustable stability sturdy feet and an easy glide for the graphic poster (9mm maximum thickness) into the metal grooves of the structure and display it back-to-back. Ideal for using in highly-populated lobbies, travel agencies, libraries or waiting rooms to provide reading material to visiting clients.

POLAN * W: Width H: Height D: Depth ***mm**

	QTY	N.W	G.W	C.B.M	Size (WxHxD)
Packing	1	6.77kg	8.47kg	0.0614	880x665x105
	Visual (X-Y)		External (WxHxD)		
Product	485x683		596.5x1569x446		
13.599	Top Header Graphic Size: 500x700mm				

x2

CAÑAMO

MADE IN EUROPE

2xA4 per shelf

made of acrylic and aluminium

2 sided available

brake wheels

INFORMATION

* W: Width H: Height D: Depth * mm

The Cañamo stand with casters is made of aluminium with acrylic shelves. The single-sided model has 4 shelves for 8xA4 format documents and double-sided has 8 shelves for 16xA4 literature documents, like brochures, journals, periodicals or newspapers. Ideal for using in highly-populated lobbies, travel agencies, libraries or waiting rooms to provide reading material for the visiting clients.

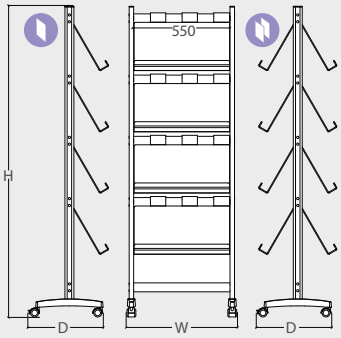

CAÑAMO

* W: Width H: Height D: Depth *mm

	QTY	N.W	G.W	C.B.M	Size (WxHxD)
Packing	1	7.3kg	9kg	0.0487	165x720x410
	1	6.45kg	8.05kg	0.0772	70x1750x630
	External (WxHxD)				
Product	629x1769x487				

x2

10.468	1-Sided (8xA4)
14.098	2-Sided (16xA4)

ABAD

MADE IN EUROPE

2xA4 per shelf

EN	With a “Click” aluminium header frame at the top.
FR	Avec un cadre “Click” dans la partie supérieure.
PT	Possui um marco de abertura "Click" na parte superior.
ES	Dispone de un marco “Click” en su parte superior.

2 sided available

brake wheels

INFORMATION

* W: Width H: Height D: Depth * mm

The Abad stand with casters is made of aluminium with acrylic shelves. The single-sided model has 4 acrylic shelves for 8xA4 format documents and the double-sided has 8 shelves for 16xA4 literature documents, like brochures, journals, periodicals or newspapers. Also it features a "Click" frame header at the top. Ideal for using in highly-populated lobbies, travel agencies, libraries or waiting rooms to provide reading material to visiting clients.

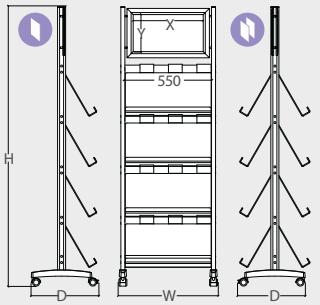

ABAD

* W: Width H: Height D: Depth *mm

	QTY	N.W	G.W	C.B.M	Size (WxHxD)
Packing	1	7.3kg	9kg	0.0487	165x720x410
	1	6.45kg	8.05kg	0.0772	70x1750x630
	Visual (X-Y)		External (WxHxD)		
Product	466x236		629x1769x487		

x2

click

10.467	Top Header Graphic Size: 488x257mm
14.099	Top Headers Graphic Size: 488x257mm (x2)

MADE IN EUROPE

SOTILLO

EN With a "Click" aluminium header frame at the top.

FR Avec un cadre "Click" dans la partie supérieure.

PT Possui um marco de abertura "Click" na parte superior.

ES Dispone de un marco "Click" en su parte superior.

for 12xA4 brochures

made of acrylic and aluminium

brake wheels

INFORMATION

* W: Width H: Height D: Depth * mm

The Sotillo Brochure Stand with casters is made of aluminium with 4 acrylic shelves for 12xA4 format literature documents, like brochures, journals, periodicals or newspapers. It features a "Click" frame header at the top. Also It is equipped with 4 brake wheels for an effortless repositioning throughout a room or an office. Ideal for using in highly-populated lobbies, travel agencies, libraries or for waiting rooms to provide reading material to the visiting clients.

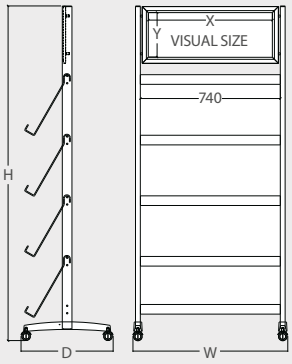

SOTILLO * W: Width H: Height D: Depth *mm

	QTY	N.W	G.W	C.B.M	Size (WxHxD)
Packing	1	9kg	10.5kg	0.062	410x920x165
	1	7.35kg	9.35kg	0.101	830x1750x70
	Visual (X-Y)		External (WxHxD)		
Product	656x236		819x1769x487		
10.469	Graphic Size: 677x257mm				

x2

click

MADE IN EUROPE

OLMEDILLA

double sided

EN With a "Click" aluminium header frame at the top.

FR Avec un cadre "Click" dans la partie supérieure.

PT Possui um marco de abertura "Click" na parte superior.

ES Dispone de un marco "Click" en su parte superior.

made of acrylic and aluminium

brake wheels

INFORMATION

* W: Width H: Height D: Depth * mm

Olmedilla Brochure Stand with casters is made of aluminium with 1 acrylic shelf for 3xA4 format literature documents, like brochures, journals or newspapers. It features a double-sided "Click" frame board (2 sizes available). Also It is equipped with 4 brake wheels. Ideal for using in highly-populated lobbies, travel agencies, libraries or for waiting rooms to provide reading material to the visiting clients.

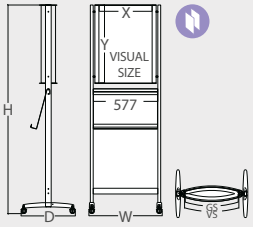

OLMEDILLA H700 * W: Width H: Height D: Depth *mm

	QTY	N.W	G.W	C.B.M	Size (WxHxD)
Packing	1	11.5kg	13.4kg	0.243	1825x205x650
	Visual (X-Y)		External (WxHxD)		
Product	476x696		655x1864x487		
10.472	Top Header Graphic Size: 500x700mm				

click

OLMEDILLA H1000 * W: Width H: Height D: Depth *mm

	QTY	N.W	G.W	C.B.M	Size (WxHxD)
Packing	1	17kg	18.5kg	0.372	850x1825x240
	Visual (X-Y)		External (WxHxD)		
Product	690x996		856x1864x487		
10.273	Top Header Graphic Size: 700x1000mm				

click

MADE IN EUROPE

VERONA
4xA4

INFORMATION * W: Width H: Height D: Depth * mm

The Verona 4xA4 Brochure Stand with casters is made of aluminium with acrylic shelves. This model has 4 shelves for A4 format documents, like brochures, journals, periodicals or newspapers. Also it has a top acrylic header for a 255x147mm graphic. This mobile Brochure Stand is ideal for using in highly-populated lobbies, travel agencies, libraries or for waiting rooms to provide reading material to the visiting clients.

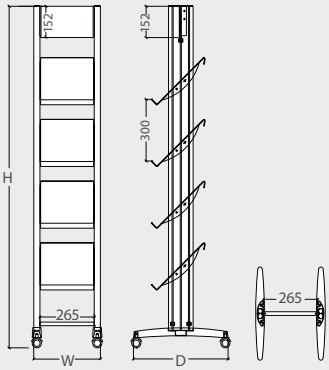

VERONA 4xA4 * W: Width H: Height D: Depth *mm

	QTY	N.W	G.W	C.B.M	Size (WxHxD)
Packing	1	3kg	3.95kg	0.0307	420x430x170
	1	4.45kg	5kg	0.0118	145x1620x80
	External (WxHxD)				
Product	325x1660x380				
10.217	Top Header Graphic Size: 255x147mm				

x2

MADE IN EUROPE

VERONA
12xA4

INFORMATION * W: Width H: Height D: Depth * mm

The Verona 12xA4 Brochure Stand with casters is made of aluminium with acrylic shelves. This model has 4 shelves for 12 xA4 format documents, like brochures, journals, periodicals or newspapers. Also it has a top acrylic header for a 730x147mm graphic. This mobile Brochure Stand is ideal for using in highly-populated lobbies, travel agencies, libraries or for waiting rooms to provide reading material to the visiting clients.

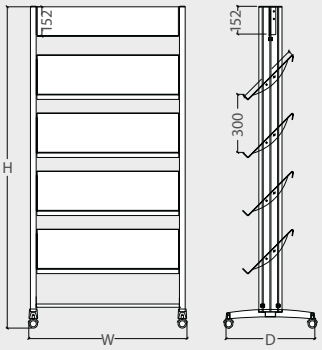

VERONA 12xA4 * W: Width H: Height D: Depth *mm

	QTY	N.W	G.W	C.B.M	Size (WxHxD)
Packing	1	3kg	3.95kg	0.0307	420x430x170
	1	4.45kg	5kg	0.0188	145x1620x80
	External (WxHxD)				
Product	800x1660x380				
10.218	Top Header Graphic Size: 730x147mm				

x2

MADE IN EUROPE

CAÑADA

LED

INFORMATION * W: Width H: Height D: Depth * mm

The Cañada Brochure Stand is made of aluminium with 4 acrylic shelves for A4 format literature documents, like flyers, magazines or brochures. It features a double-sided large poster holder on one of its sides, so Cañada Brochure Stand is ideal for using in highly-populated lobbies, travel agencies, libraries or for waiting rooms to provide reading material to the visiting clients, also thanks to its LED Light, it's useful for darker halls or movie theaters.

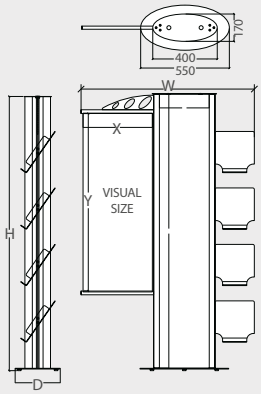

CAÑADA * W: Width H: Height D: Depth *mm

	QTY	N.W	G.W	C.B.M	Size (WxHxD)
Packing	1	18.5kg	19.7kg	0.3752	652x345x1740
	Visual (X-Y)		External (WxHxD)		
Product	Totem: 308x1699 Totem: 430x1109		1074x1700x280		
10.470	Totem Graphic Size: 324x1700mm Poster Graphic Size: 430x1100mm				

MADE IN EUROPE

HITO

INFORMATION * W: Width H: Height D: Depth * mm

The Hito Brochure Stand is made of silver finish aluminium with 3 acrylic shelves for A4 format literature documents, like flyers, magazines or brochures. It features a solid and stable 8 weight steel base and a double-sided large poster holder on one of its sides, so Hito Brochure Stand is ideal for using in highly populated lobbies, travel agencies, libraries or for waiting rooms to provide reading material to the visiting clients.

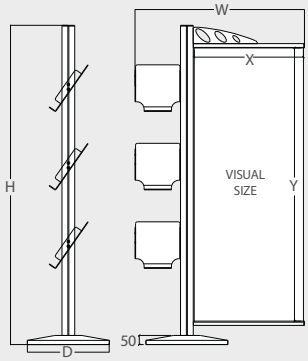

HITO * W: Width H: Height D: Depth *mm

	QTY	N.W	G.W	C.B.M	Size (WxHxD)
Packing	1	2.8kg	3.6kg	0.0123	80x1920x80
	1	8.2kg	8.5kg	0.0097	440x440x50
	1	1.6kg	1.9kg	0.0190	390x650x75
	Visual (X-Y)		External (WxHxD)		
Product	600x1500		930x1753x450		
10.471	Graphic Size: 600x1510mm				

x3

EN	Wall-mounted leaflet dispenser. Made of aluminum and acrylic. Capacity 8xA4.
FR	Porte brochures à fixer au mur, fabriqué en aluminium et acrylique. Capacité 8xA4.
PT	Porta-catálogos de parede, fabricado em alumínio e acrílico. Capacidade de 8xA4.
ES	Portafolletos a pared, realizado en aluminio y metacrilato. Con capacidad para 8xA4.

MADE IN EUROPE

for 8xA4 brochures

made of acrylic and aluminium

ATHY

* W: Width H: Height D: Depth * mm

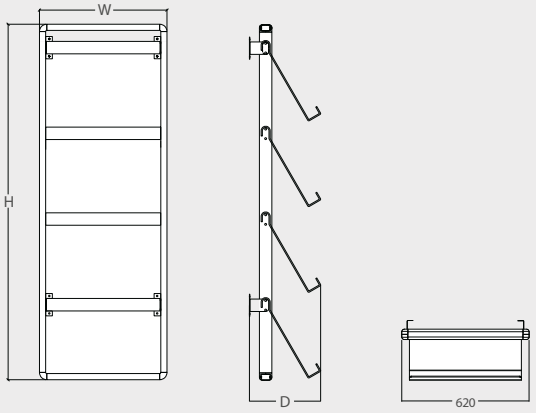

INFORMATION

Athy Brochure Wall Holder has 4 shelves and it is designed to accommodate 2xA4 portrait format documents by shelf. The magazine rack is wall mounting, giving you more floor space while still providing passersby with information. This type of rack system allows you to adjust the literature holders to the size you need. In this manner, it is up and out of your way, while remaining at eye level for your customers. Athy Holder is ideal for an office or lobby. Also see it in waiting rooms to hold your magazines and newspapers, or in information centers, travel bureaus and clinics to hold your brochures.

ATHY * W: Width H: Height D: Depth ***mm**

	QTY	N.W	G.W	C.B.M	Size (WxHxD)
Packing	1	11.7kg	13.4kg	0.1742	185x1500x650
	External (WxHxD)				
Product	620x1450x290				

10.988

STEEL BOARDS

EN	Double-sided boards, suitable for indoor or outdoor areas of great affluence. Several colors and sizes available.
FR	Chevalet double face, appropriés pour les zones intérieures ou extérieures de grande affluence. Plusieurs couleurs et tailles disponibles.
PT	Cavaletes de dupla face. Ideal para áreas com grande afluência, tanto interiores como exteriores. Várias cores e tamanhas disponíveis.
ES	Caballetes portagráficas de doble cara. Ideal para áreas de gran afluencia en exterior o interior. Varios colores y tamaños disponibles.

KERRY

MADE IN EUROPE

INFORMATION

* W: Width H: Height D: Depth * mm

Kerry Double-sided Frame is made of durable lacquered galvanized steel, ensuring years of durability and functionality, available in 3 colors. Designed for indoor and outdoor use. The non-glare protective cover (included) attaches easily using magnets. Ideal to advertise home sales, open houses, restaurant specials, store sales or promotional services.

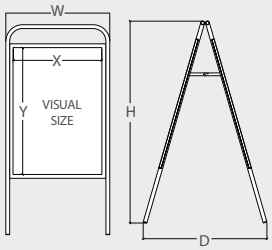

KERRY H700

* W: Width H: Height D: Depth *mm

	QTY	N.W	G.W	C.B.M	Size (WxHxD)
Packing	1	11.8kg	12.7kg	0.0504	575x80x1095
	Visual (X-Y)		External (WxHxD)		
Product	462x662		544x1056x647		

10.691 Graphic Size: 500x700mm

KERRY H1000

* W: Width H: Height D: Depth *mm

	QTY	N.W	G.W	C.B.M	Size (WxHxD)
Packing	1	16.35kg	17.9kg	0.0766	760x70x1440
	Visual (X-Y)		External (WxHxD)		
Product	662x962		744x1345x814		

10.692 Graphic Size: 700x1000mm

CORK

MADE IN EUROPE

INFORMATION

* W: Width H: Height D: Depth * mm

Cork Double-sided Frame is made of durable lacquered galvanized steel available in 3 colors. Designed for indoor and outdoor use. Also it features a top header area. The non-glare protective cover (included) attaches easily using magnets. The Cork Board is ideal to advertise home sales, open houses, restaurant menu specials, store sales or promotional services.

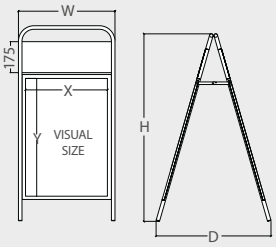

CORK H700

* W: Width H: Height D: Depth *mm

	QTY	N.W	G.W	C.B.M	Size (WxHxD)
Packing	1	11.7kg	12.7kg	0.0459	460x70x1170
	Visual (X-Y)		External (WxHxD)		
Product	462x662 504x175		544x1056x647		

10.695 Graphic Size: 500x700mm
Top Header Graphic Size: 175x504mm

CORK H1000

* W: Width H: Height D: Depth *mm

	QTY	N.W	G.W	C.B.M	Size (WxHxD)
Packing	1	18.65kg	20.2kg	0.0766	760x70x1440
	Visual (X-Y)		External (WxHxD)		
Product	662x962 704x175		744x1345x814		

10.696 Graphic Size: 700x1000mm
Top Header Graphic Size: 175x704mm

with magnetic protective cover

MONAGHAN

MADE IN EUROPE

INFORMATION * W: Width H: Height D: Depth * mm

Monaghan 2-sided board is made of durable lacquered galvanized steel available in 3 colors. Designed for indoor and outdoor use. Also it features a top header for a graphic. The non-glare protective cover (included) attaches easily using magnets. This Board is ideal to advertise home sales, open houses, restaurant menu specials, store sales or promotional services.

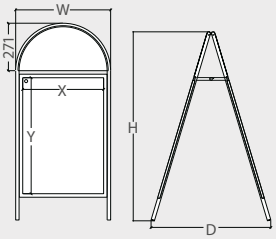

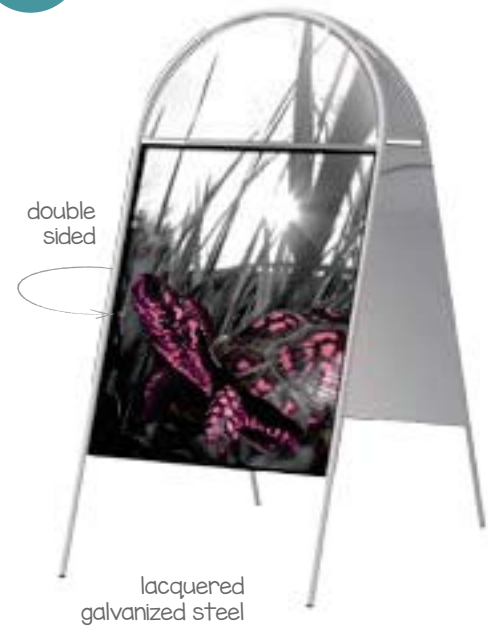

MONAGHAN H700 * W: Width H: Height D: Depth *mm

	QTY	N.W	G.W	C.B.M	Size (WxHxD)
Packing	1	11.7kg	12.7kg	0.0459	560x70x1170
	Visual (X-Y)		External (WxHxD)		
Product	462x662 502x250		683x1078x683		
10.699			Graphic Size: 500x700mm Top Header Graphic Size: 514x256mm		

MONAGHAN H1000 * W: Width H: Height D: Depth *mm

	QTY	N.W	G.W	C.B.M	Size (WxHxD)
Packing	1	7.5kg	8.9kg	0.0702	765x60x1530
	Visual (X-Y)		External (WxHxD)		
Product	702x1002 702x361		742x1523x675		
10.700			Graphic Size: 700x1000mm Top Header Graphic Size: 714x357mm		

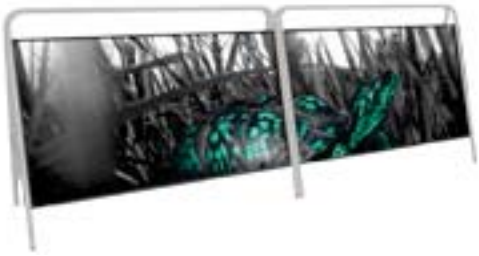

LIFFORD

MADE IN EUROPE

INFORMATION * W: Width H: Height D: Depth * mm

Lifford double-sided board is made of durable white lacquered galvanized steel. Designed for both indoor and outdoor. The non-glare protective cover is included and it attaches easily to the front using magnets. This Steel Board is ideal to use together with other(s) Lifford for creating a large billboard to advertise home or restaurant sales, store specials or for promotional services.

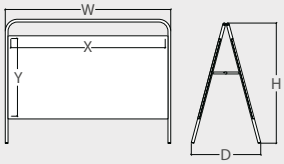

LIFFORD * W: Width H: Height D: Depth *mm

	QTY	N.W	G.W	C.B.M	Size (WxHxD)
Packing	1	15.7kg	17kg	0.0751	935x65x1235
	Visual (X-Y)		External (WxHxD)		
Product	1120x564		1200x872x505		
10.701			Graphic Size: 1156x600mm		

EN	A-Whiteboard, produced in epoxy painted steel for an extra protection. Can be used with a white board for markers (which is supplied separately).
FR	Chevalet. Produit en acier peint époxy pour une protection supplémentaire. Peut être utilisé avec un tableau blanc pour marqueurs (fourni séparément).
PT	Cavalete pintado com epóxi para uma proteção extra. Pode ser usado com um painel branco (vendido por separado)
ES	Caballete fabricado en acero pintado al epoxi para mayor protección. Se puede colocar una pizarra blanca para rotuladores que se suministra aparte.

OUTDOOR POSTER STAND

INFORMATION * W: Width H: Height D: Depth * mm

The Outdoor Poster Stand is made of durable Epoxi painted Steel. Featuring 6 colors available and the possibility of being used with a whiteboard (sold separately | 10.168) for markers. This Outdoor A-frame can be seen from both sides when placing on a sidewalk for maximum viewers. Ideal to advertise home sales, open houses, restaurant specials, store sales or promotional services. To change out signs, just slide the poster through the steel holders.

OUTDOOR POSTER STAND * W: Width H: Height D: Depth *mm

	QTY	N.W	G.W	C.B.M	Size (WxHxD)
Packing	1	6kg	6.7kg	0.0523	1200x65x670
	Visual (X-Y)				
Product	600x1000				
10.167					Graphic Size: 600x1000mm

WHITEBOARD * W: Width H: Height D: Depth *mm

	QTY	N.W	G.W	C.B.M	Size (WxHxD)
Packing	1	1kg	1kg	0.0523	1200x65x670
10.168		Whiteboard: 590x995mm			

DOVER

3 different models available

DOVER * W: Width H: Height D: Depth *mm

	QTY	N.W	G.W	C.B.M	Size (WxHxD)
Packing	1	1.4kg	2kg	0.0258	525x55x895
	Visual (X-Y) 13.129		Visual (X-Y) 13.130 13.131		External (WxHxD)
Product	480x715		480x815		500x820x665
13.129	Graphic Size: 480x715mm				
13.130	Graphic Size: 480x815mm				
13.131	Blackboard: 480x815mm				

INFORMATION * W: Width H: Height D: Depth * mm

The double-sided Dover A-Board features 3 different models, the first one comes with handle for an easy transportation, second one features all along customizable front for a great visual impact and the third model features a Blackboard in front of both sides, ideal when placing on a sidewalk for maximum viewers.

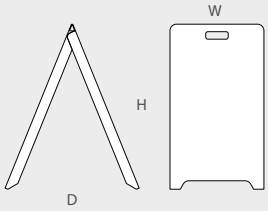

	EN	PT
	Carry bag included	Bolsa de transporte incluída
	One sided	Uma face
	Double-sided	Dupla face
	With motion	Com movimento
	With light	Com luz
LED	Led tecnology	Tecnologia led
	Telescopic	Telescópico
TEXTILE	Printed on textil	Impressão textil
	With lock	Com fechadura
	Rainproof	Impermeável
	For outdoor use	Para exterior
	With spotlights	Com focos
ADH	With adhesive	Com adesivo
	Cardboard	Cartão
	With suction pad	Com ventosa
NEW	New item	Novidade
	Lineweight	Peso extra
RESIST	Extraweight	Leve
flex	Flexible	Flexível
	Magnetic	Magnético
	Plug-in	Eléctrico
LARGE	Big sizes	De grandes dimensões
	Portrait	Vertical
	Landscape	Horizontal
	Portrait or landscape	Vertical ou horizontal
click	'Click' system	Sistema 'click'
Magic Tape	With 'magic tape'	Com 'magic tape'
acrylic	Acrylic	Acrílico
	Economic	Económico
	Tools required	Ferramentas necessárias
	No tools required	Ferramentas não necessárias
L	Capacity	Capacidade
	Request price for large quantity	Desconto por quantidade sob consulta
QTY	Quantity	Quantidade
NW	Net weight	Peso líquido
GW	Gross weight	Peso bruto
CBM	Cubic meter	Metro cúbico
Size	Measures	Medidas

1	VISUAL COMMUNICATION	COMUNICAÇÃO VISUAL
2	CARDBOARD	CARTÃO
3	EXHIBITION SOLUTIONS	SOLUÇÕES DE EXIBIÇÃO
4	CLICK FRAMES AND BROCHURE STANDS	MOLDURAS CLICK E SUPORTES DE BROCHURAS
5	OUTDOOR EVENTS	EVENTOS EXTERIORES
6	CABLE KIT	SISTEMAS DE CABO DE AÇO
7	BOARDS AND SHOWCASES	QUADROS E VITRINAS
8	ACRYLIC DISPLAYS	DISPLAYS DE ACRÍLICO
9	BARRIER POLES	POSTES PARA BARREIRAS
10	PLV	PONTOS DE VENDA
11	SIGNS	SINALÉTICA
12	SIGN ACCESSORIES	ACESSÓRIOS PARA SINALÉTICA

Visite o nosso site!
Visit our website.

COMUNICAÇÃO VISUAL . CARTÃO . SOLUÇÕES DE EXIBIÇÃO . MOLDURAS CLICK E SUPORTES PARA BROCCHURAS . EVENTOS NO EXTERIOR . SISTEMAS EM CABO DE AÇO . QUADROS E VITRINES . DISPLAYS EM ACRÍLICO . POSTES PARA BARREIRAS . PONTO DE VENDA . SINALÉTICA . ACESSÓRIOS PARA SINALÉTICA

VISUAL COMMUNICATION . CARDBOARD . EXHIBITION SOLUTIONS . CLICK FRAMES AND BROCHURE STANDS . OUTDOOR EVENTS . CABLE KIT . BOARDS AND SHOWCASES . ACRYLIC DISPLAYS . BARRIER POLES . PLV . SIGNS . SIGN ACCESSORIES

BANG DISPLAY display solutions

Spart CREATIVE DESIGN STUDIO

Rua Ribeira do Troca, Zona Industrial da Paiã,
Arm. 12B, 1675-086 Pontinha - PORTUGAL
+351 212 840 789 _ info@spart.pt

© 2018.Spart - Creative Design studio
Todos osdireitos reservados.
All rights reservated.

Preços válidos, salvo erros topográficos.
Preços sujeitos a alteração sem aviso prévio.
A reprodução parcial ou integral desta brochura é proibida.

www.spart.pt